US009159006B2

(12) **United States Patent**
Meike et al.

(10) **Patent No.: US 9,159,006 B2**
(45) **Date of Patent: Oct. 13, 2015**

(54) **SYSTEM AND METHOD FOR DOCUMENT TRANSMISSION FROM A COMPUTING DEVICE TO A PORTBALE ELECTRONIC DEVICE**

(71) Applicant: **BLACKBERRY LIMITED**, Waterloo (CA)

(72) Inventors: **Roger Charles Meike**, Redwood City, CA (US); **David Paul Yach**, Waterloo (CA); **Richard John George**, Waterloo (CA); **Tu Dien Do**, Kanata (CA)

(73) Assignee: **BlackBerry Limited**, Waterloo, Ontario (CA)

(*) Notice: Subject to any disclaimer, the term of this patent is extended or adjusted under 35 U.S.C. 154(b) by 0 days.

(21) Appl. No.: **14/263,702**

(22) Filed: **Apr. 28, 2014**

(65) **Prior Publication Data**

US 2014/0233052 A1 Aug. 21, 2014

Related U.S. Application Data

(63) Continuation of application No. 13/570,337, filed on Aug. 9, 2012, now Pat. No. 8,736,860, which is a continuation of application No. PCT/US2011/056385, filed on Oct. 14, 2011.

(60) Provisional application No. 61/471,594, filed on Apr. 4, 2011, provisional application No. 61/473,488, filed on Apr. 8, 2011.

(51) **Int. Cl.**
G06K 15/00 (2006.01)
G06K 15/02 (2006.01)
(Continued)

(52) **U.S. Cl.**
CPC ***G06K 15/1889*** (2013.01); ***G06F 3/122*** (2013.01); ***G06F 3/1219*** (2013.01); ***G06F 3/1222*** (2013.01); ***G06F 3/1231*** (2013.01);
(Continued)

(58) **Field of Classification Search**
CPC G06K 15/1889
USPC 358/1.13, 1.15
See application file for complete search history.

(56) **References Cited**

U.S. PATENT DOCUMENTS

6,301,609 B1 10/2001 Aravamudan et al.
6,886,036 B1 4/2005 Santamaki et al.
(Continued)

FOREIGN PATENT DOCUMENTS

EP 1 832 971 A1 9/2007

OTHER PUBLICATIONS

iPrinter, Apr. 7, 2010.
(Continued)

Primary Examiner — Qian Yang
(74) *Attorney, Agent, or Firm* — Jon Gibbons; Fleit Gibbons Gutman Bongini & Bianco P.L.

(57) **ABSTRACT**

The present disclosure provides methods and apparatus for managing a document. An example aspect provides a method of requesting a document to be displayed at a portable electronic device, including: installing at a computer a printer driver for displaying documents at the portable electronic device; creating an association of a portable account identifier with a unique identifier of the portable electronic device; using the printer driver and the association, to transmit the document to the portable electronic device over a network; and transmitting from the computer the document.

20 Claims, 15 Drawing Sheets

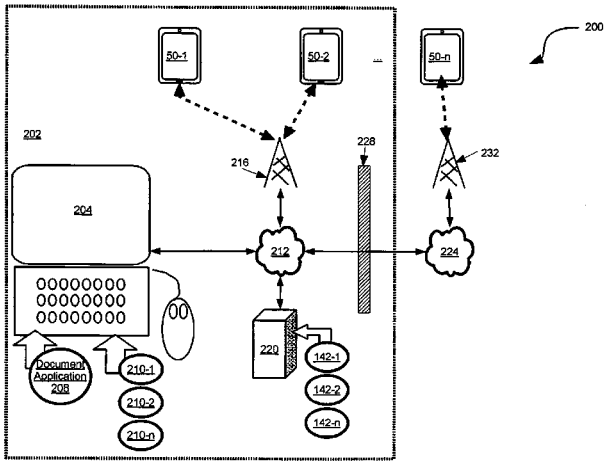

(51) **Int. Cl.**

G06F 3/12	(2006.01)
H04L 12/58	(2006.01)
H04L 29/12	(2006.01)
H04M 1/725	(2006.01)
H04L 29/08	(2006.01)

(52) **U.S. Cl.**

CPC ***G06F 3/1238*** (2013.01); ***G06F 3/1285*** (2013.01); ***G06F 3/1289*** (2013.01); ***G06F 3/1297*** (2013.01); ***H04L 12/5835*** (2013.01); ***H04L 12/5895*** (2013.01); ***H04L 61/103*** (2013.01); ***H04L 61/15*** (2013.01); ***H04L 61/2076*** (2013.01); ***H04L 61/2575*** (2013.01); ***H04L 61/2589*** (2013.01); ***H04L 67/2823*** (2013.01); ***H04L 67/2895*** (2013.01); ***H04L 67/303*** (2013.01); ***H04M 1/72522*** (2013.01); *G06F 3/1225* (2013.01); *G06F 3/1267* (2013.01); *G06F 3/1288* (2013.01); *G06F 2206/1512* (2013.01)

(56) **References Cited**

U.S. PATENT DOCUMENTS

6,978,378	B1	12/2005	Koretz	
7,405,844	B2 *	7/2008	Ferlitsch	358/1.6
7,522,675	B2	4/2009	Sheynman et al.	
7,889,374	B2	2/2011	Wang et al.	
2003/0220994	A1	11/2003	Zhu	
2004/0205453	A1	10/2004	Mortensen	
2006/0033956	A1	2/2006	Takahashi	
2007/0030509	A1 *	2/2007	Garg et al.	358/1.15
2007/0234354	A1 *	10/2007	Hattori	717/177
2007/0240042	A1	10/2007	Sato	
2008/0231886	A1 *	9/2008	Wehner et al.	358/1.15
2009/0168113	A1 *	7/2009	Penkov	358/402
2010/0097637	A1 *	4/2010	Gha	358/1.15
2010/0131358	A1	5/2010	Ueshima	
2010/0275115	A1	10/2010	Oh et al.	
2011/0302009	A1 *	12/2011	Freed et al.	705/14.16

OTHER PUBLICATIONS

ACTPrinter, 2005. http://www. houdah.com/ACTPrinter.

Print 2 Phone. 2010. http://alfoldinorbert.hu/print2phone/.

Instapaper. Mar. 22, 2011.

Lardinois, Frederic. "Read It Later: iPhone Bookmarking and Offline Reading on Steroids." Apr. 10, 2009. http://readwrite.com/2009/04/10/read_it_later_iphone_bookmarking_and_offline_reading.

Savoy, Vlad. "HTC Flyer Parades Its Many Unique Qualities in Latest Video from the Company". Mar. 31, 2011. http://www.engadget.com/2011/03/31/htc-flyer-parades-its-many-unique-qualities-in-latest-video-from/.

Good.iWare Ltd. "GoodReader for iPad." Mar. 4, 2011.

Internet Printing Protocol. Jan. 22, 2011.

Schroeder, Kurt. IBM Systems Magazine. "Encrypted Printing via Internet Printing Protocol." Jun. 2007.

Ecamm Networks Printer Options. Mar. 3, 2011.

International Search Report issued Jan. 17, 2012, in PCT/US2011/056385 filed Oct. 14, 2011.

International Written Opinion issued Jan. 17, 2012, in PCT/US2011/056385 filed Oct. 14, 2011.

* cited by examiner

Fig. 1

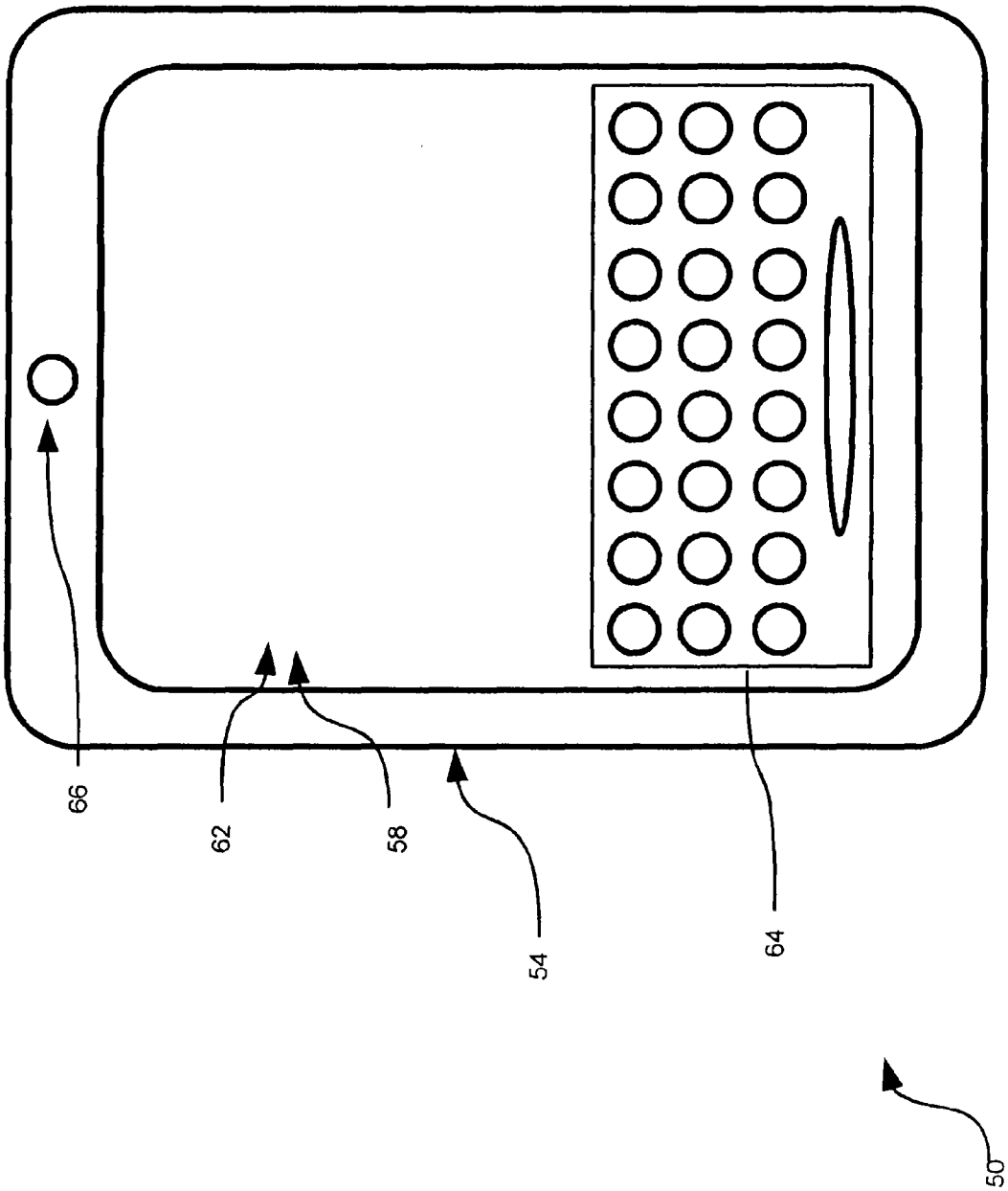

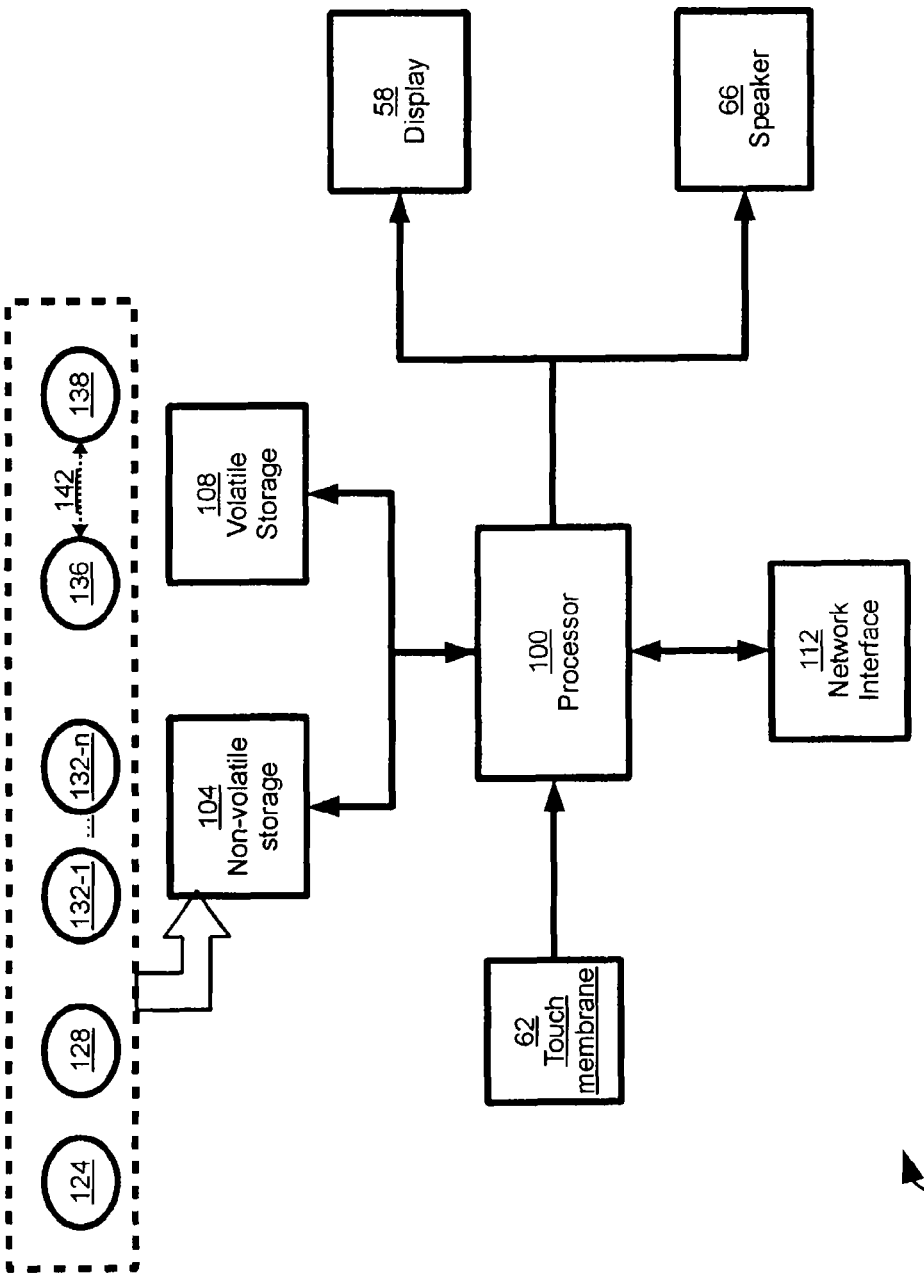
58 Display
66 Speaker
108 Volatile Storage
100 Processor
112 Network Interface
104 Non-volatile storage
62 Touch membrane
124
128
132-1
132-n
136
142
138
50

Fig. 2

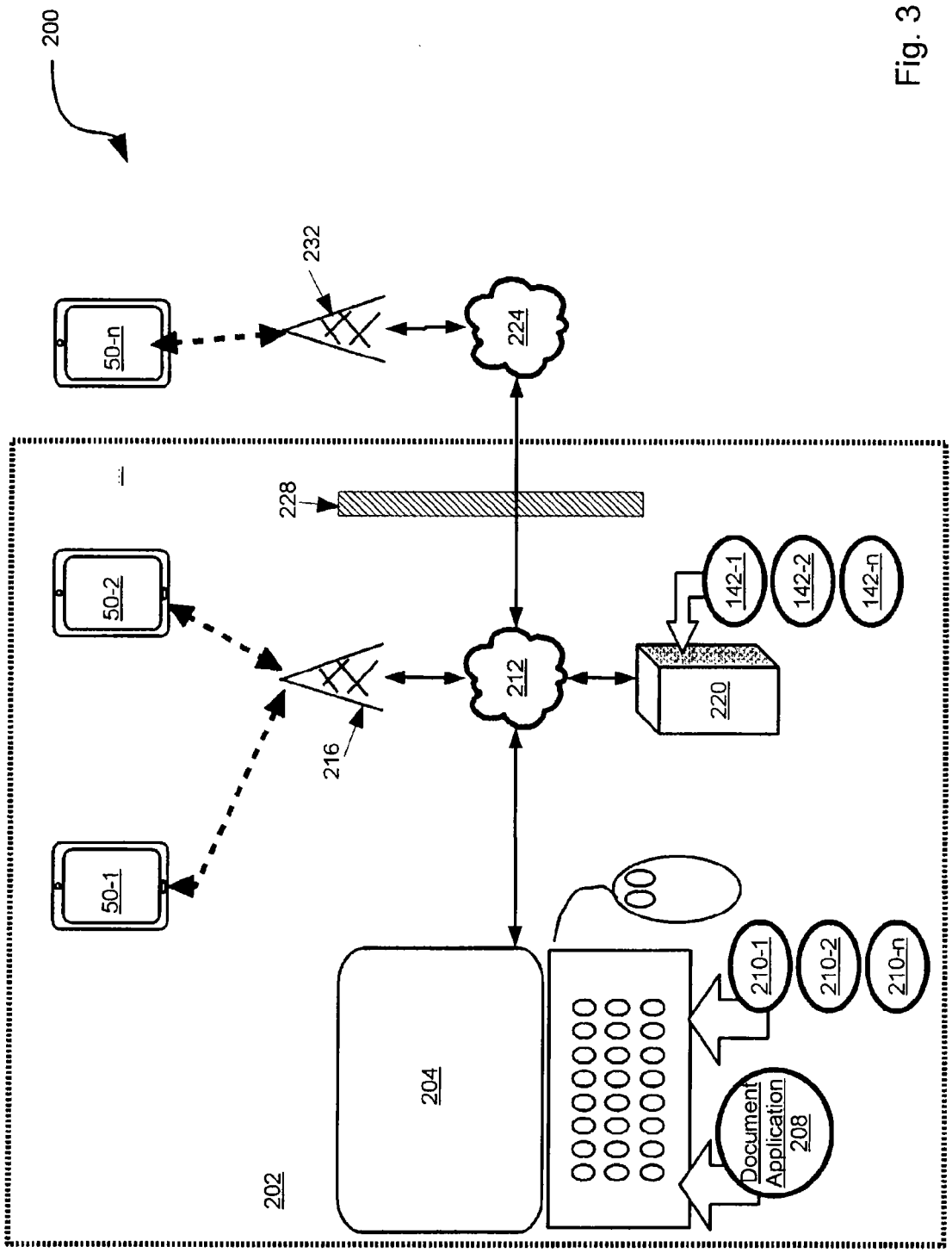
200
232
50-n
224
228
50-2
142-1
142-2
142-n
212
220
216
50-1
210-1
210-2
210-n
204
Document Application 208
202

Fig. 3

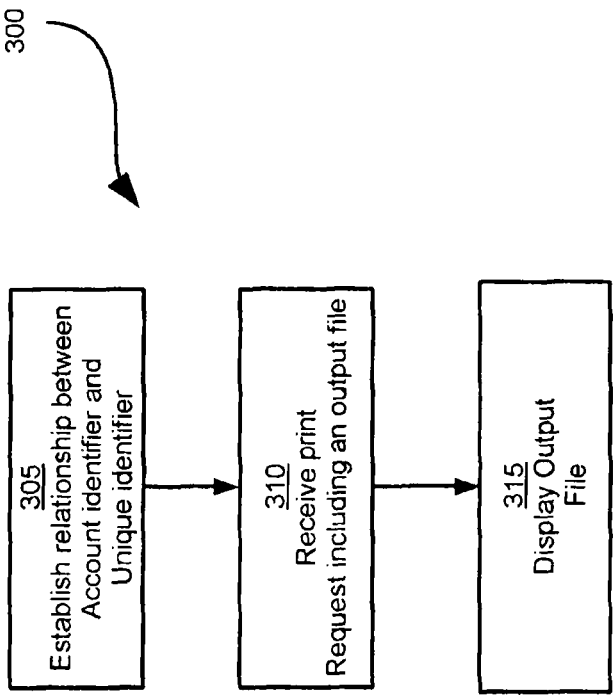
300
305
Establish relationship between Account identifier and Unique identifier
310
Receive print Request including an output file
315
Display Output File

Fig. 4

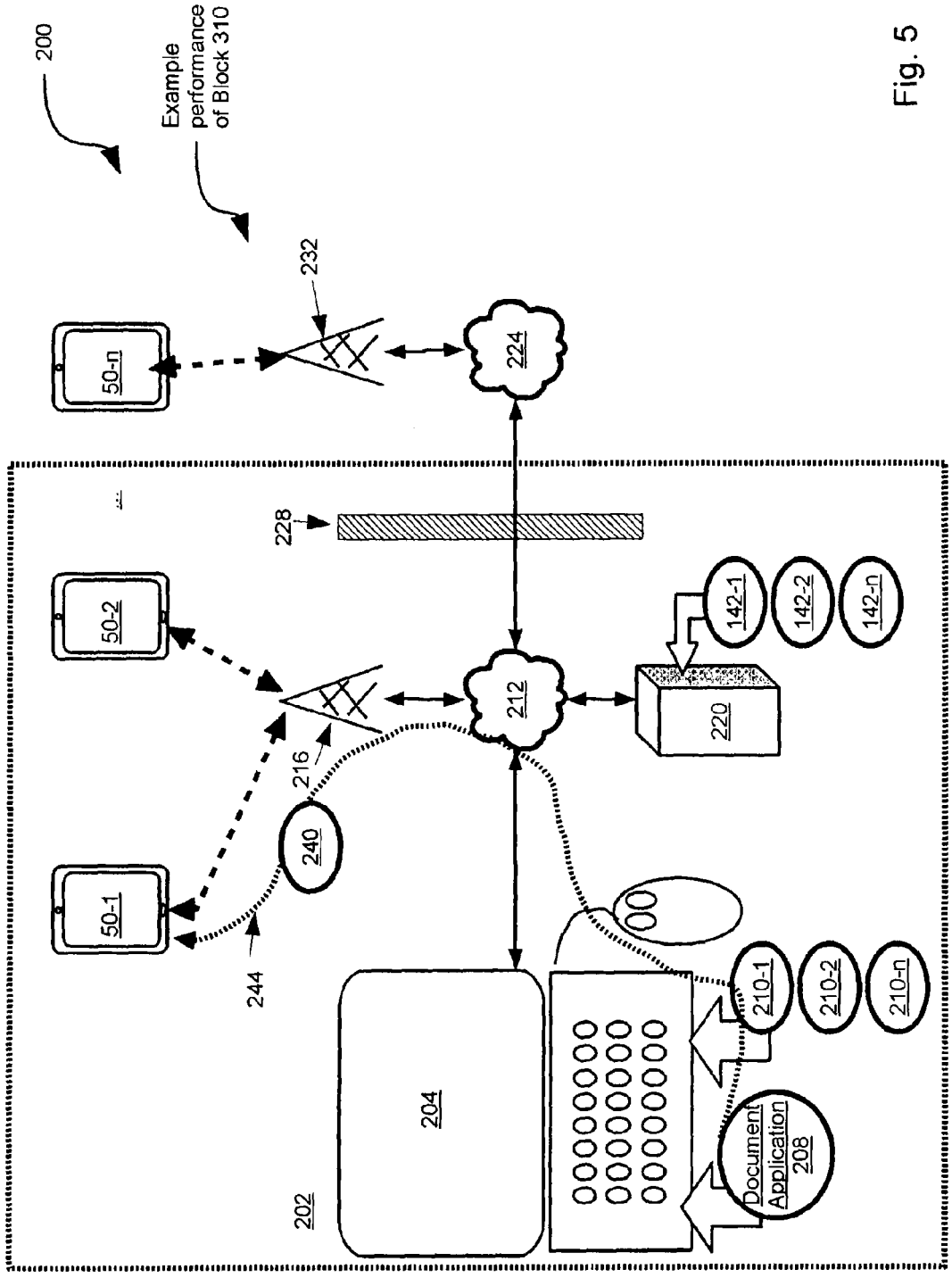
200
Example performance of Block 310
232
50-n
224
228
50-2
142-1
142-2
142-n
212
220
216
240
50-1
244
210-1
210-2
210-n
204
Document Application 208
202

Fig. 5

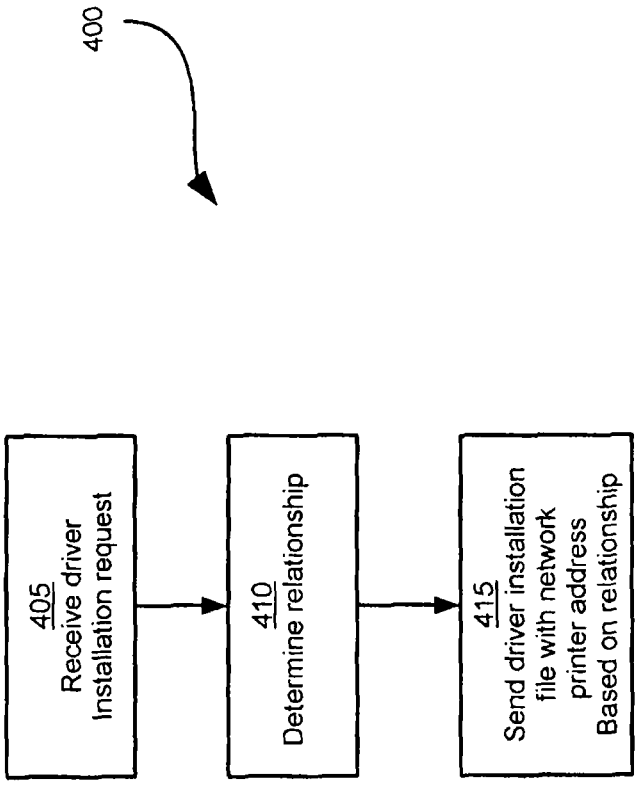
400
405
Receive driver
Installation request
410
Determine relationship
415
Send driver installation
file with network
printer address
Based on relationship

Fig. 6

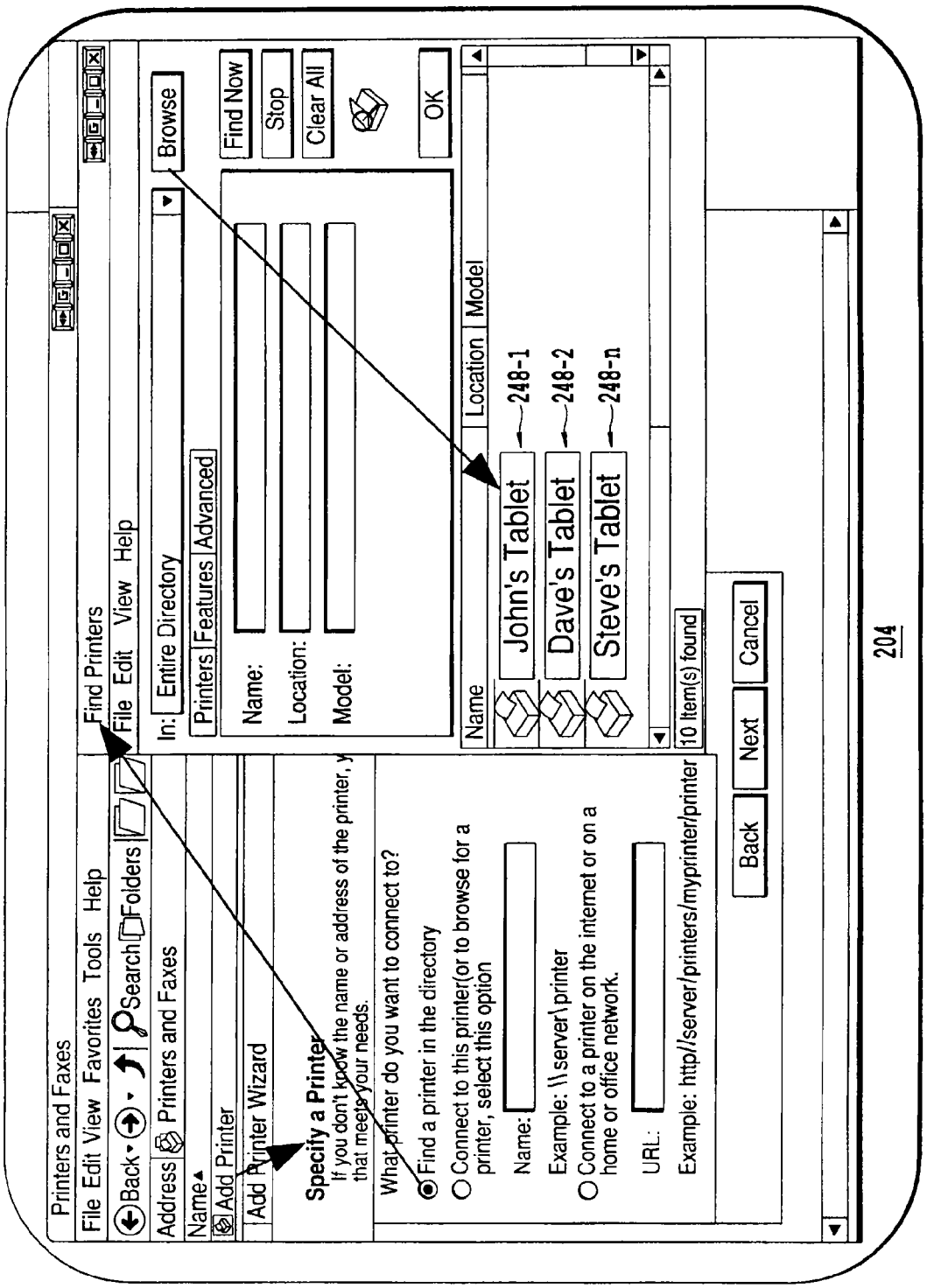
Printers and Faxes
File Edit View Favorites Tools Help
Back Search Folders
Address Printers and Faxes
Name
Add Printer
Add Printer Wizard
Specify a Printer
If you don't know the name or address of the printer, y
that meets your needs.
What printer do you want to connect to?
Find a printer in the directory
Connect to this printer(or to browse for a printer, select this option
Name:
Example: \\server\printer
Connect to a printer on the internet or on a home or office network.
URL:
Example: http//server/printers/myprinter/printer
Back
Next
Cancel
Find Printers
File Edit View Help
In: Entire Directory
Browse
Printers Features Advanced
Name:
Location:
Model:
Find Now
Stop
Clear All
OK
Name
Location
Model
John's Tablet
Dave's Tablet
Steve's Tablet
248-1
248-2
248-n
10 Item(s) found
204

Fig. 7

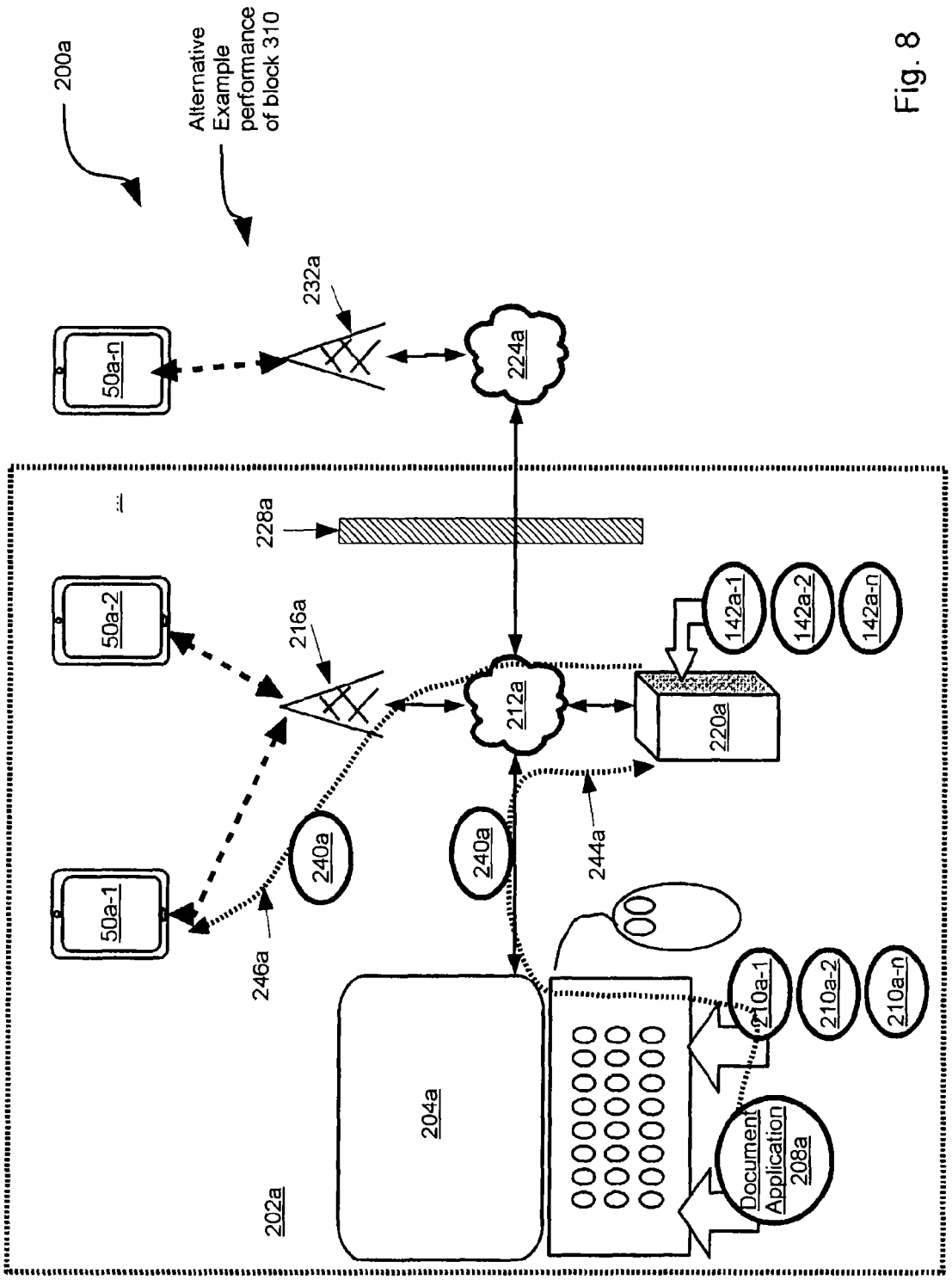
200a
Alternative Example performance of block 310
232a
50a-n
224a
228a
50a-2
216a
212a
142a-1
142a-2
142a-n
220a
240a
240a
244a
50a-1
246a
204a
210a-1
210a-2
210a-n
Document Application 208a
202a

Fig. 8

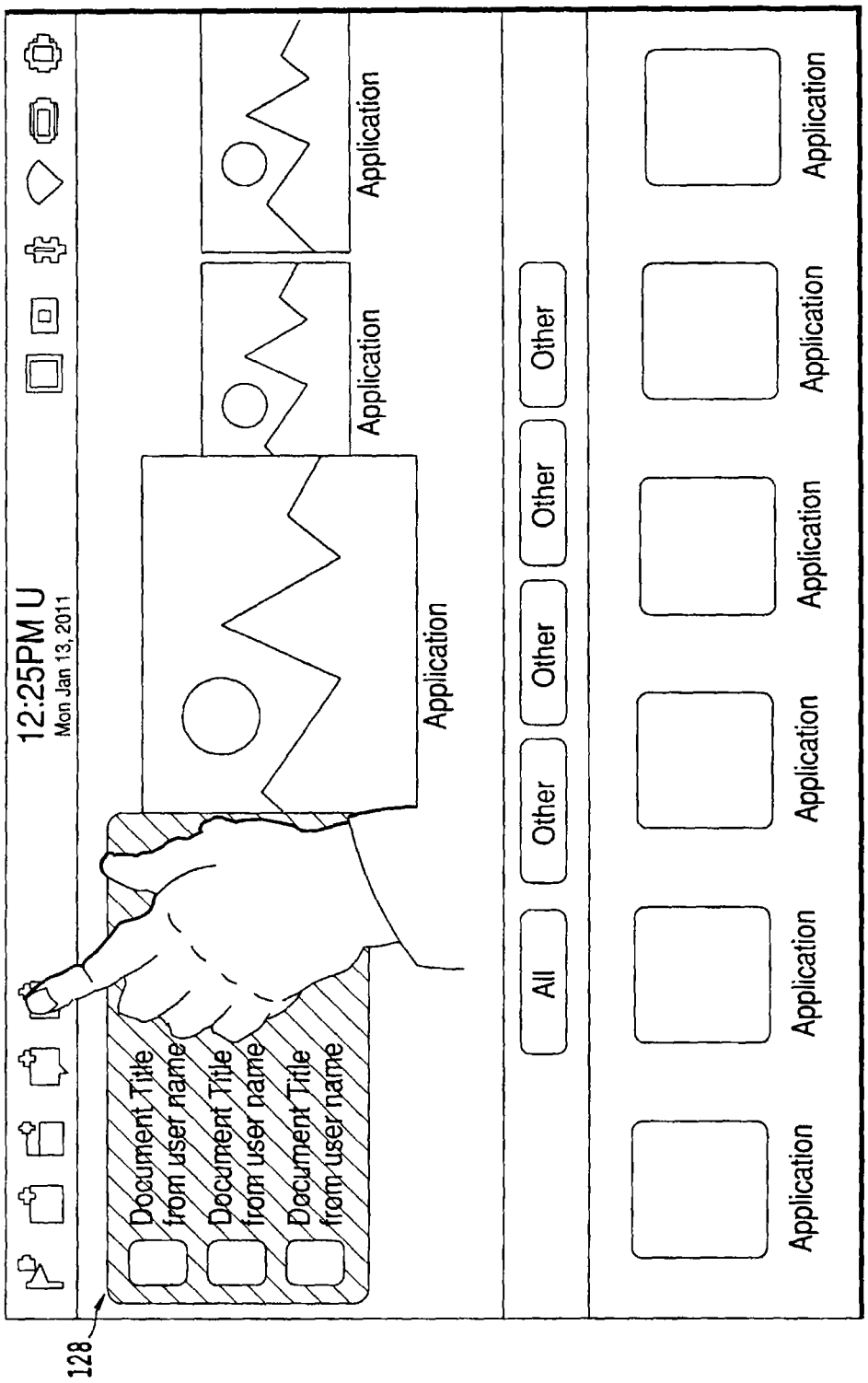
12:25PM U
Mon Jan 13, 2011
Document Title
from user name
Document Title
from user name
Document Title
from user name
Application
Application
Application
All
Other
Other
Other
Other
Application
Application
Application
Application
Application
128
58

Fig. 9

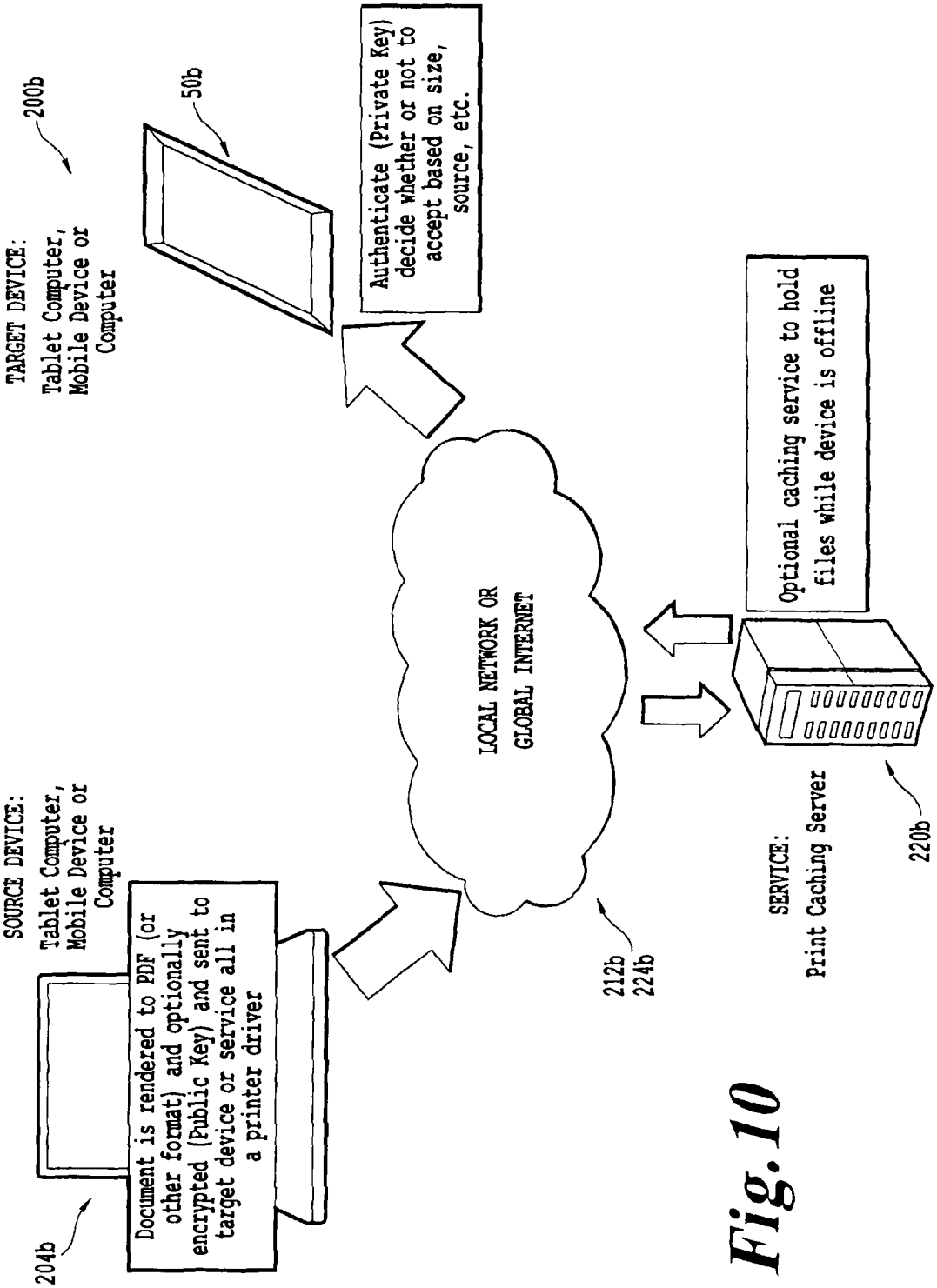
TARGET DEVICE:
Tablet Computer, Mobile Device or Computer
200b
50b
Authenticate (Private Key) decide whether or not to accept based on size, source, etc.
SOURCE DEVICE:
Tablet Computer, Mobile Device or Computer
Document is rendered to PDF (or other format) and optionally encrypted (Public Key) and sent to target device or service all in a printer driver
204b
LOCAL NETWORK OR GLOBAL INTERNET
212b
224b
Optional caching service to hold files while device is offline
SERVICE:
Print Caching Server
220b

Fig. 10

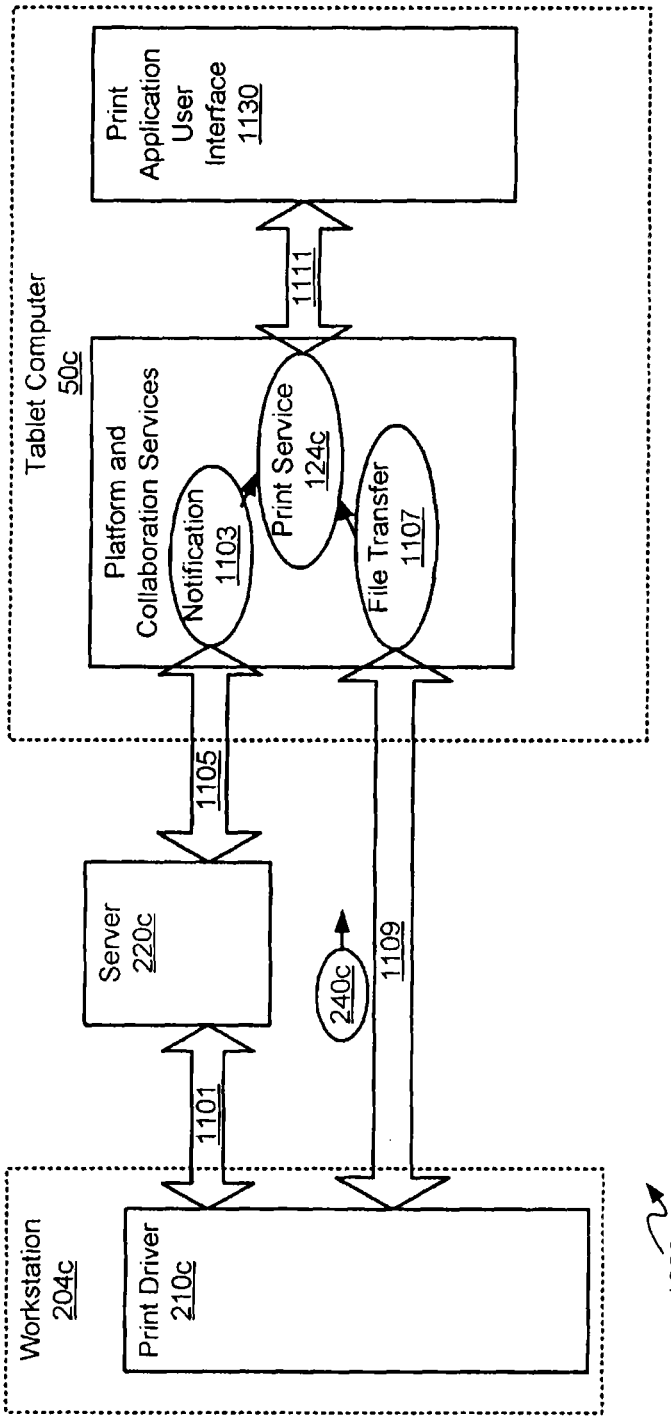
Tablet Computer
50c
Print Application User Interface 1130
1111
Platform and Collaboration Services
Notification 1103
Print Service 124c
File Transfer 1107
1105
Server 220c
240c
1109
1101
Workstation 204c
Print Driver 210c
1000

Fig. 11

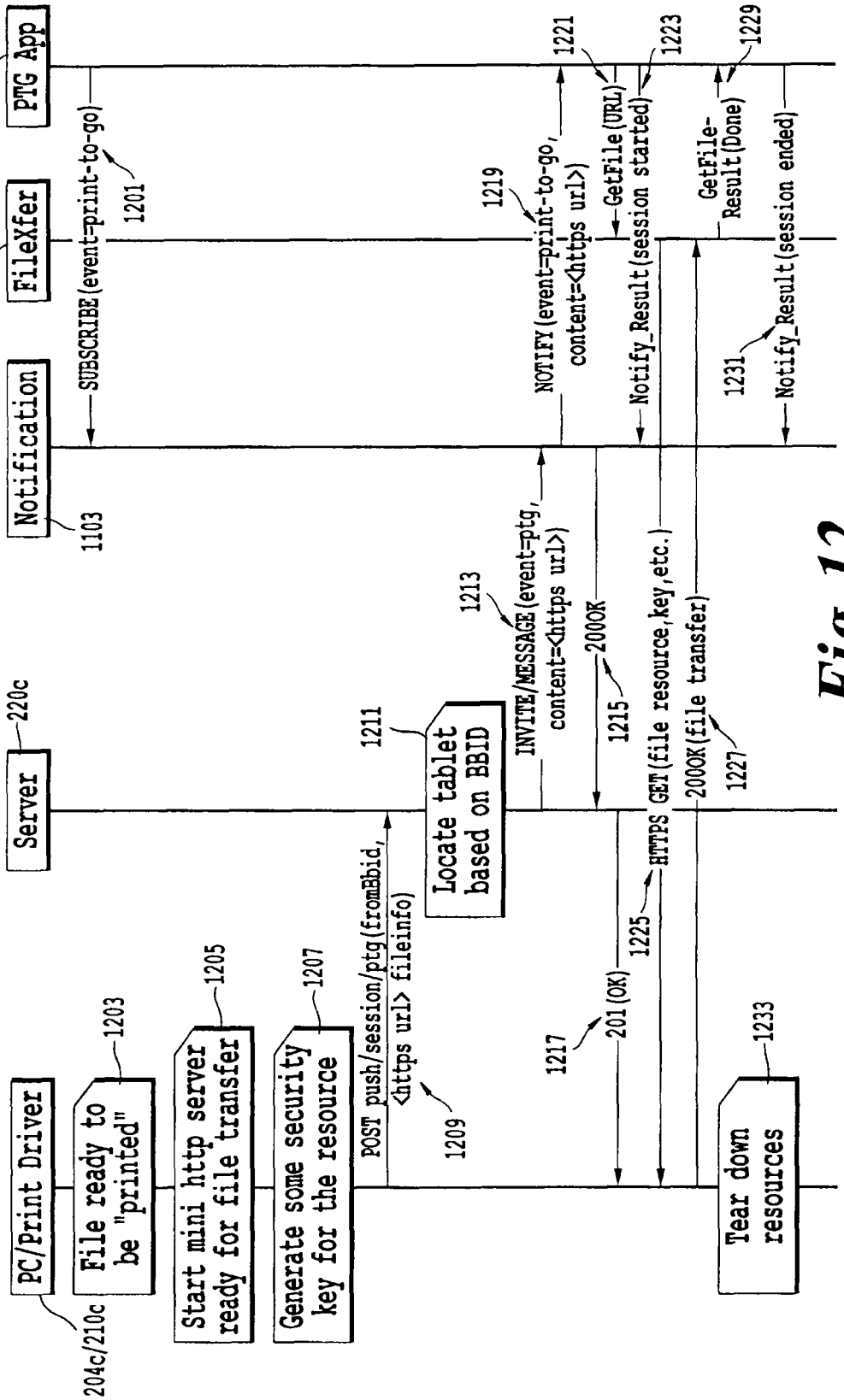
PC/Print Driver
204c/210c
File ready to be "printed"
1203
Start mini http server ready for file transfer
1205
Generate some security key for the resource
1207
Server
220c
POST push/session/ptg(fromBbid, <https url> fileinfo)
1209
1211
Locate tablet based on BBID
1213
INVITE/MESSAGE(event=ptg, content=<https url>)
200OK
1215
1217
201(OK)
1225
HTTPS
GET(file resource,key,etc.)
200OK(file transfer)
1227
Tear down resources
1233
Notification
1103
SUBSCRIBE(event=print-to-go)
1201
NOTIFY(event=print-to-go, content=<https url>)
1219
1221
GetFile(URL)
Notify_Result(session started)
1223
GetFile-Result(Done)
1229
1231
Notify_Result(session ended)
1107
FileXfer
124c
PTG App

Fig. 12

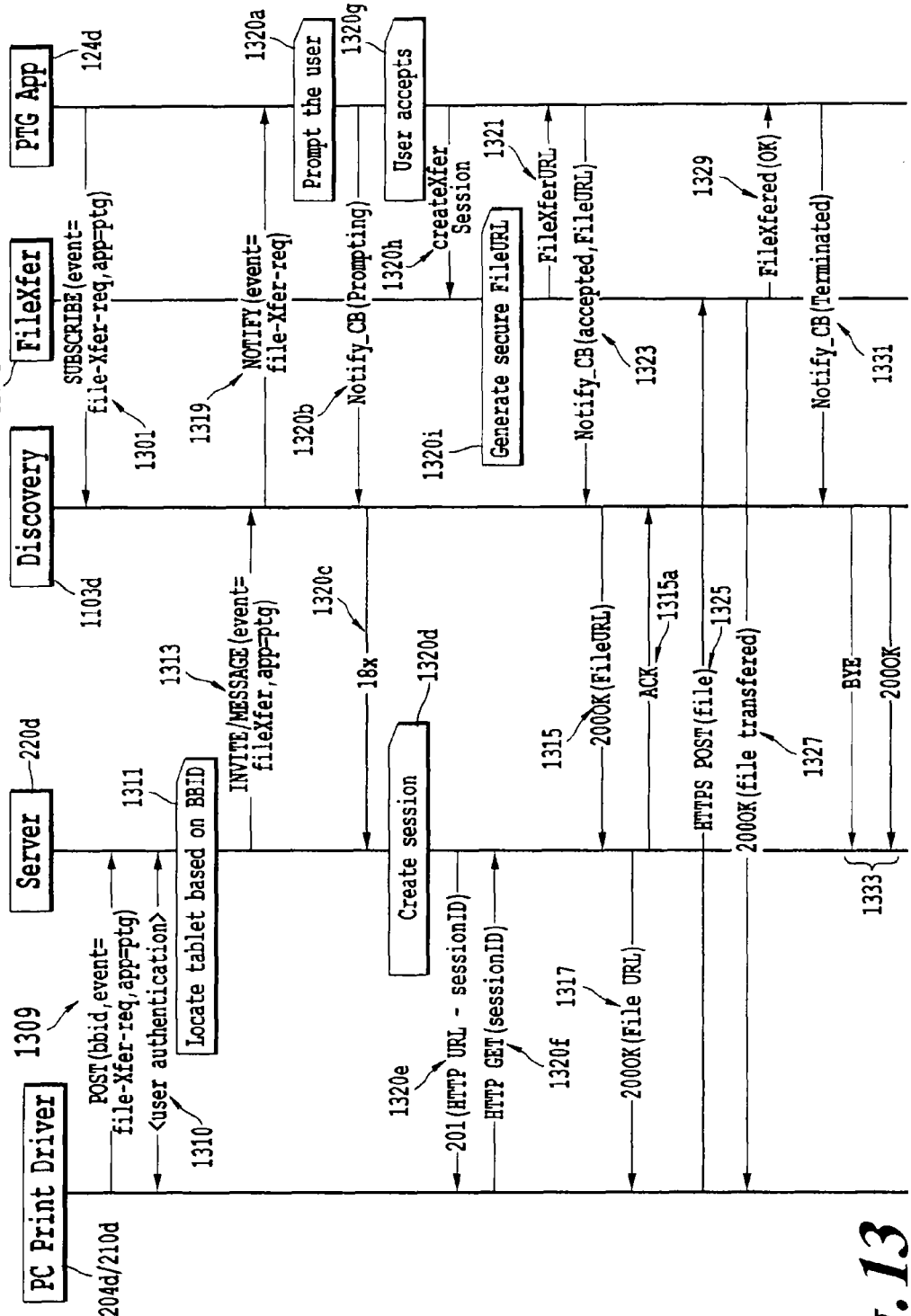
PC Print Driver
204d/210d
Server
220d
Discovery
1103d
FileXfer
1107d
PTG App
124d
1309
POST(bbid,event=file-Xfer-req,app=ptg)
1310
<user authentication>
1311
Locate tablet based on BBID
1313
INVITE/MESSAGE(event=fileXfer,app=ptg)
1301
SUBSCRIBE(event=file-Xfer-req,app=ptg)
1319
NOTIFY(event=file-Xfer-req)
1320a
Prompt the user
1320b
Notify_CB(Prompting)
1320c
18x
1320d
Create session
1320e
201(HTTP URL - sessionID)
1320f
HTTP GET(sessionID)
1317
200OK(File URL)
1320g
User accepts
1320h
createXfer Session
1320i
Generate secure FileURL
1321
FileXferURL
1315
200OK(FileURL)
1323
Notify_CB(accepted,FileURL)
1315a
ACK
1325
HTTPS POST(file)
1327
200OK(file transfered)
1329
FileXfered(OK)
1331
Notify_CB(Terminated)
1333
BYE
200OK

Fig. 13

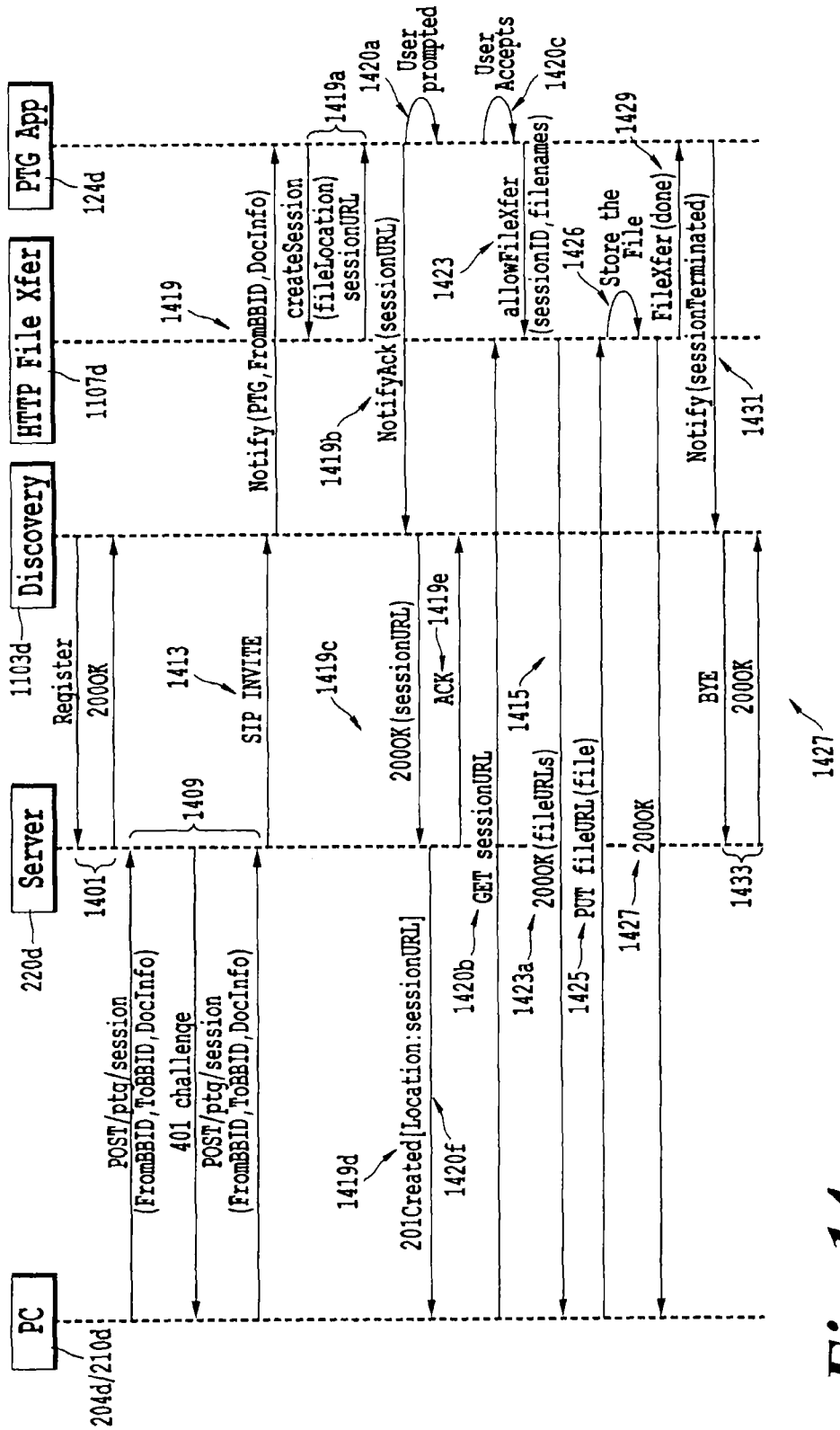
PC
204d/210d
Server
220d
Discovery
1103d
HTTP File Xfer
1107d
PTG App
124d
Register
200OK
1401
1409
POST/ptg/session
(FromBBID,ToBBID,DocInfo)
401 challenge
POST/ptg/session
(FromBBID,ToBBID,DocInfo)
1413
SIP INVITE
1419
Notify(PTG,FromBBID,DocInfo)
1419a
createSession
(fileLocation)
sessionURL
1419b
NotifyAck(sessionURL)
1419c
200OK(sessionURL)
1419d
201Created[Location:sessionURL]
1420f
1420a
User
prompted
1420b
GET sessionURL
1419e
ACK
1423
allowFileXfer
(sessionID,filenames)
1423a
200OK(fileURLs)
1415
1425
PUT fileURL(file)
1426
Store the
File
1427
200OK
1427
1429
FileXfer(done)
1431
Notify(sessionTerminated)
1433
BYE
200OK
1427

Fig. 14

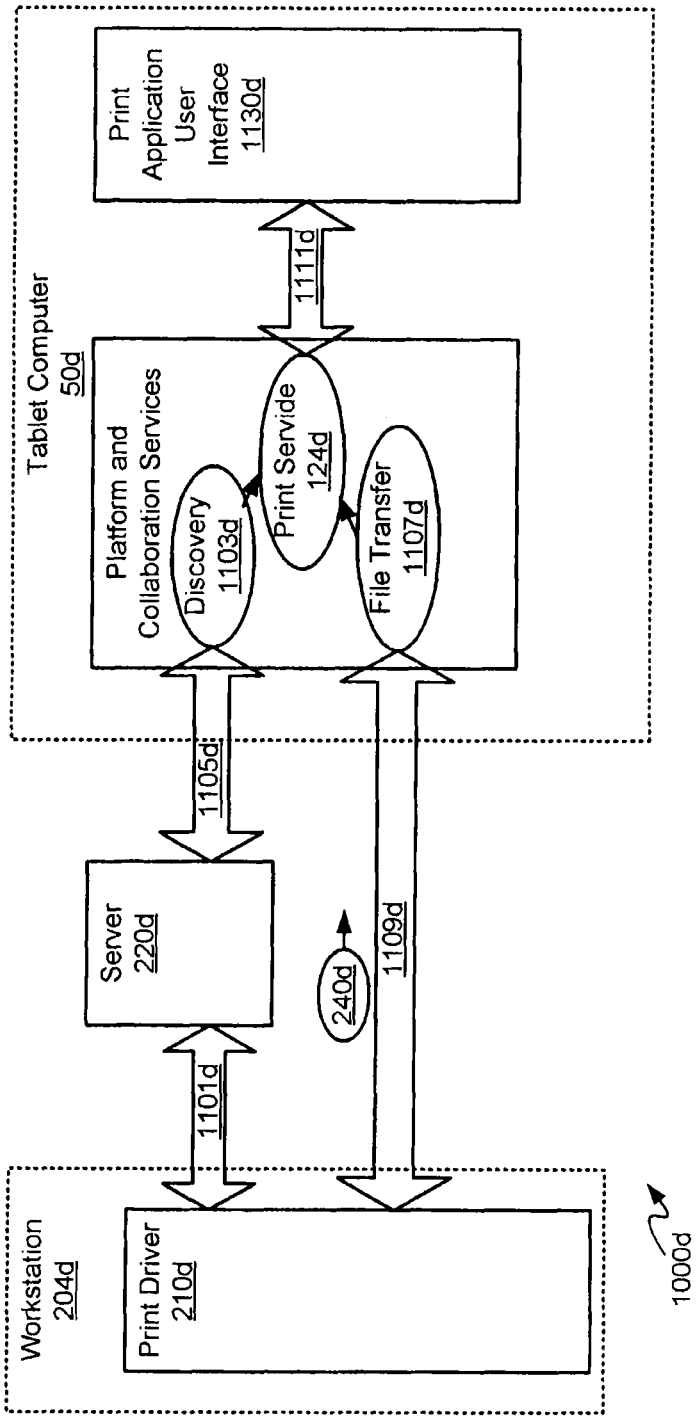
Tablet Computer
50d
Print Application User Interface 1130d
11111d
Platform and Collaboration Services
Discovery 1103d
Print Servide 124d
File Transfer 1107d
1105d
Server 220d
240d
1109d
1101d
Workstation 204d
Print Driver 210d
1000d

Fig. 15

SYSTEM AND METHOD FOR DOCUMENT TRANSMISSION FROM A COMPUTING DEVICE TO A PORTBALE ELECTRONIC DEVICE

CROSS-REFERENCE TO RELATED APPLICATIONS

This application is a continuation of U.S. application Ser. No. 13/570,337, filed Aug. 9, 2012, which is a continuation of International Application No. PCT/US2011/056385, filed Oct. 14, 2011, which claims the benefit of U.S. Provisional Patent Application No. 61/471,594, filed Apr. 4, 2011, and U.S. Provisional Patent Application No. 61/473,488, filed Apr. 8, 2011. The contents of all of these applications are expressly incorporated herein by reference in their entirety.

FIELD

The present disclosure relates generally to computing devices and more specifically relates to a document management system using printer emulation.

BACKGROUND

Portable computing devices are increasingly powerful. Likewise more progress is being made towards paperless environments. Portable computing devices can support the goals of achieving paperless environments.

BRIEF DESCRIPTION OF THE DRAWINGS

FIG. **1** is a schematic representation of a front view of an example tablet computer.

FIG. **2** is a block diagram of the electronic components of the tablet computer shown in FIG. **1**.

FIG. **3** shows an example system for document management incorporating a plurality of the devices of FIG. **1**.

FIG. **4** shows a flowchart depicting an example method for document management.

FIG. **5** shows a variation on the system of FIG. **3** providing an example of in which block **310** of the method of FIG. **4** can be implemented.

FIG. **6** shows a flowchart depicting an example method for installing a printer driver on a computer.

FIG. **7** shows an example graphical interface that can be generated on the computer as part of performance of the method of FIG. **6**.

FIG. **8** shows another variation on the system of FIG. **3** providing another example in which block **310** of the method of FIG. **4** can be implemented.

FIG. **9** shows an example of a document manger application on a display of the tablet computer of FIG. **1** that can be used to browse documents received on the tablet computer using the method of FIG. **3** or its variants.

FIG. **10** shows another example system for document management.

FIG. **11** shows another example system for document management.

FIGS. **12-14** show communication diagrams illustrating example methods for document management.

FIG. **15** shows another example system for document management.

DETAILED DESCRIPTION OF EXAMPLE EMBODIMENTS

An example aspect provides a method of requesting a document to be displayed at a portable electronic device,

including: installing at a computer a printer driver for displaying documents at the portable electronic device; creating an association of a portable account identifier with a unique identifier of the portable electronic device; using the printer driver and the association, to transmit the document to the portable electronic device over a network; and transmitting from the computer the document.

An example aspect provides a method of displaying a document at a portable electronic device, including: creating an association of a portable account identifier with a unique identifier of the portable electronic device; using the association, to receive at the portable electronic device over a network the document; receiving an input at the portable electronic device to display the document; and displaying the document on a display of the portable electronic device.

An example aspect provides a method of identifying a document to be displayed at a portable electronic device, including: creating an association of a portable account identifier with a unique identifier of the portable electronic device; installing at a computer a printer driver for printing at the portable electronic device, including adding the portable electronic device to a list of printer devices available to the computer; using the association and the printer driver, including selecting the portable electronic device from the list of printer devices, to transmit the document to the portable electronic device over a network; and transmitting from the computer the document.

An example aspect provides a portable electronic device to display a document, including a display. The portable electronic device further includes a processor, controlling the display, and configured to: create an association of a portable account identifier with a unique identifier of the portable electronic device; use the association, to receive at the portable electronic device over a network the document; and receive an input at the portable electronic device to display the document; and display the document on the display.

An example aspect provides a method for document management using printer emulation at a portable electronic device including: establishing a relationship in electronic memory of the portable electronic device between a portable account identifier and a unique identifier of the portable electronic device; receiving a print request at the portable electronic device over a network; the print request originating from a computer and wherein a network printer address for the portable electronic device used to route the print request is managed by a server based on the relationship between the portable account identifier and the unique identifier; the print request including an output file; generating the output file on a display of the portable electronic device. The method can further include removing the relationship such that further print requests are not receivable at the portable electronic device.

Another example aspect provides a method for managing a document using printer emulation, the method including: associating a portable account identifier with a portable electronic device, wherein the portable account identifier is removably associated with the portable electronic device; receiving a request at a server, the request including the portable account identifier of the portable electronic device; and directing an output file to a print service of the portable electronic device using a network connection.

Other example aspects of this method are as follows. The request can be received from a computer. The output file can be sent from a computer to the portable electronic device. The output file can be pulled from a computer to the portable electronic device. The output file can be sent directly from a computer to portable electronic device after getting the

unique identifier. The associating can be continuously performed. The file can be held back when the portable electronic device is not ready. Communications between the server and the portable electronic device can occur over protocols associated with a multimedia communications application at the portable electronic device.

A further example aspect provides a method for managing a document using printer emulation, the method including: adding a portable account identifier to a list of printer devices available on a computer, the portable account identifier being removably associated with a portable electronic device; generating an output file from the document; sending a request to transmit an output file, the request sent to a server wherein the request includes the portable account identifier; and transmitting the output file to the portable electronic device associated with the portable account identifier.

Other example aspects of this method are as follows. Receiving of the association can be from the server. Transmitting can be through the server. The transmitting through the server can include the server sending the output file as an email attachment to the portable electronic device. The output file can be transmitted directly to the portable electronic device.

Yet a further example aspect can provides a method for managing a document using printer emulation, the method including: selecting a portable electronic device of a receiver for outputting a document, wherein selecting involves receiving sender-specified input from a print menu at a client device; establishing a network connection between the client device and the portable electronic device, wherein establishing involves removably associating the portable electronic device with the receiver using a server; generating an output file from the document at a client device; transmitting the output file from the client device to the portable electronic device; receiving the output file at the portable electronic device; and displaying the output file on a display screen of the portable electronic device.

Other example aspects of this method are as follows. The generating can include using a printer driver to generate the output file. The portable electronic device can include a tablet computer. The establishing can include determining whether the portable electronic device is available to receive the output file. The transmitting can include, when the portable electronic device is unavailable, delaying transmitting until the portable electronic device becomes available. The transmitting can include transmitting the output file directly to the portable electronic device from the client device. The transmitting can include transmitting the output file to the portable electronic device from the client device through the server. The output file can be transmitted from the server to the portable electronic device via email. The method can further include encrypting the output file. The encrypting can include encrypting the output file at the client device and decrypting the output file at the portable electronic device. The method can further include providing an availability status of the portable electronic device to the client device. The network connection can be a wireless connection. The method can further include putting the output file in a print queue. The method can further include one or more of: receiving a user-inputted command at the output device to sort the output file among other files; highlighting a portion of the output file; forwarding the output file to another device; and bookmarking a portion of the output file. The output file can be a portable document format (PDF) document. The method can be performed using a Samba browser. The method can further include informing the client device of the print service. The informing can be performed using a Bonjour browser. The method can further include providing a prompt at portable electronic device when establishing the network connection, the prompt to accept or decline a print request, and when the print request is declined, transmitting an indication of the decline to the client device which prevents at least the transmitting, receiving and displaying steps from occurring. The transmitting the output file from the client device to the portable electronic device can include pushing the output file from the client device to the portable electronic device. The transmitting the output file from the client device to the portable electronic device can include pulling the output file from the client device to the portable electronic device.

FIG. **1** is a schematic representation of a non-limiting example of a portable electronic device such as a tablet computer **50** which can be used for as part of a document management system using printer emulation, as discussed in greater detail below. Tablet computer **50** is an example, and it will be apparent to those skilled in the art that a variety of different portable electronic device structures, other than tablet computers, can be used in other example embodiments. Indeed variations on tablet computing tablet computer **50** can include, without limitation, a cellular telephone, a portable email paging device, a camera, a portable music player, a portable video player, a personal digital assistant, a portable book reader, a portable video game player, a netbook computer, or a laptop computer. Furthermore, example variations include combinations of any of the above devices. Other example variations include devices which are not necessarily portable, such as desktop computers.

Referring to FIG. **1**, tablet computer **50** includes a chassis **54** that supports a display **58**. Display **58** can include one or more light emitters such as an array of light emitting diodes (LED), liquid crystals, plasma cells, or organic light emitting diodes (OLED). Other types of light emitters can be used. A touch-sensitive membrane **62** is overlaid on display **58** to thereby provide an input device for tablet computer **50**. As a non-limiting example, tablet computer **50** can be configured to selectively show or hide a virtual keyboard **64**. Other types of input devices can be provided on chassis **54**, other than touch membrane **62**, or in addition to touch membrane **62**, can be used. For example, a physical keyboard, or touch-pad, or joystick or trackball or track-wheel, a microphone, or optical camera or any one or more of them can be provided, in addition to or in lieu of touch membrane **62**. Such other components may, if desired, be "slide-out" components. In example implementation, tablet computer **50** also includes a speaker **66** for generating audio output. Speaker **66** may be implemented as, or augmented with, a wired or wireless headset or both.

FIG. **2** shows a schematic block diagram of the electronic components of tablet computer **50**. It should be emphasized that the structure in FIG. **2** is a non-limiting example. In FIG. **2**, tablet computer **50** includes an input device in the form of a touch membrane **62**. (As discussed above, other input devices can be used even if not expressly discussed herein.) Touch membrane **62** has been discussed above.

Input from touch membrane **62** is received at a processor **100**. In variations, processor **100** may be implemented as a plurality of processors or multi-core processors or both. Processor **100** can be configured to execute different programming instructions that can be responsive to the input received via the one or more input devices. To fulfill its programming functions, processor **100** is also configured to utilize electronic memory. Such electronic memory, in an example embodiment, includes at least one non-volatile storage unit **104** (e.g. Erasable Electronic Programmable Read Only Memory ("EEPROM"), Flash Memory) and at least one vola-

tile storage unit **108** (e.g. random access memory ("RAM")). Other configurations of electronic memory can be used. Programming instructions that implement the functional teachings of tablet computer **50** as described herein are typically maintained, persistently, in non-volatile storage unit **104** and used by processor **100** which makes appropriate utilization of volatile storage **108** during the execution of such programming instructions.

Processor **100** in turn is also configured to control display **58** and speaker **66** and any other output devices that may be provided in tablet computer **50**, also in accordance with different programming instructions and responsive to different input received from the input devices.

Processor **100** also connects to a network interface **112**, which can be implemented in example embodiment as a radio configured to communicate over a wireless link, although in variants tablet computer **50** can also include a network interface for communicating over a wired link. Network interface **112** can thus be generalized as a further input/output device that can be utilized by processor **100** to fulfill various programming instructions. Interface **112** is configured to correspond with the network architecture that defines such a link. Present, commonly employed network architectures for such a link include, but are not limited to, Global System for Mobile communication ("GSM"), General Packet Relay Service ("GPRS"), Enhanced Data Rates for GSM Evolution ("EDGE"), 3G, High Speed Packet Access ("HSPA"), Code Division Multiple Access ("CDMA"), Evolution-Data Optimized ("EVDO"), Institute of Electrical and Electronic Engineers ("IEEE") standard 802.11, Bluetooth™ or any of their variants or successors. In an example embodiment, each network interface **112** can include multiple radios to accommodate the different protocols that may be used to simultaneously or individually communicate over different types of links.

As will become apparent further below, tablet computer **50** can be implemented with different configurations than described, omitting certain input devices or including extra input devices, and likewise omitting certain output devices or including extra output devices.

Tablet computer **50** is configured to maintain, within non-volatile storage **104**, a printer service **124**, a document manager **128**, and optionally, one or more additional applications **132-1**, . . . **132-*n***. (Generically, additional application **132**, and collectively, additional applications **132**. This nomenclature is used elsewhere herein.) Printer service **124**, document manager **128** and additional applications **132** can be prestored in non-volatile storage **104** upon manufacture of tablet computer **50**, or downloaded via network interface **112** and saved on non-volatile storage **104** at any time subsequent to manufacture of tablet computer **50**.

Processor **100** is configured to execute printer service **124**, accessing non-volatile storage **104** and volatile storage **108** as needed. As will be explained further below, printer service **124** is configured to emulate a traditional, paper-based printer such that tablet computer **50** can appear on a network as a printer to other devices connected to that network, so that documents can be virtually printed to tablet computer **50** and stored on non-volatile storage **104** or volatile storage **108** or both from other devices on the network.

Processor **100** is also configured to execute document manager **128**, accessing non-volatile storage **104** and volatile storage **108** as needed. The implementation of document manager **128** is not particularly limited, but is generally configured to receive input instructions to browse and access any documents or files stored on tablet computer **50**. In particular, virtually printed documents that are received via printer service **124** can be browsed and opened via document manager **128**. Document manager **128** can be implemented as a file manager application, or can be part of a document reader or document editor application, or all of them.

Additional applications **132** can be any application that can be stored and executed according to the processor and other resources of tablet computer **50**. Such additional applications **132** can also include their own document managers or can be document readers or can be any other type of application as well.

Tablet computer **50** is also configured to maintain a unique identifier **136** for identifying tablet computer **50** from other network devices, as will be discussed further below. Non-limiting examples of possible types of unique identifiers include a serial number for processor **100**, or an International Mobile Subscriber Identity (IMSI). Other types of unique identifiers will now occur to those skilled in the art.

Furthermore, tablet computer **50** is also configured to maintain a portable account identifier **138** for associating the tablet computer with a user, as will be discussed further below. Non-limiting examples of possible types of portable account identifiers include an email address, or an International Mobile Subscriber Identity (IMSI). Other types of portable account identifiers will now occur to those skilled in the art.

As will be discussed in greater detail below, a relationship **142** can be established between portable account identifier **138** and unique identifier **136** which can be used to address print requests to tablet computer **50**. The term relationship is used herein to refer to, in an example embodiment, a unique number that represents the pairing of portable account identifier **138** and unique identifier **136**. Such a unique number may be a hash or a concatenation, or can be generated using any desired computing operation.

In FIG. **3**, a document management system using printer emulation in accordance with another example embodiment is shown generally at **200**. System **200** generally contemplates an enterprise configuration **202** that includes a plurality of tablet computers **50** that are all associated with an enterprise configuration **202**.

Enterprise configuration **202** thus includes at least one computer **204**, Computer **204**, in example embodiments, is a computer that is not intended to be moved often, such as workstation computer, desktop computer or a server. However, in other example embodiments computer **204** may be portable and can include, without limitation, a cellular telephone, a portable email paging device, a camera, a portable music player, a portable video player, a personal digital assistant, a portable book reader, a portable video game player, a netbook computer, a laptop computer, or combinations of these devices.

Computer **204** is configured to execute a document application **208**. The nature of document application **208** is not particularly limited, and can be, for example, a word processor, a spreadsheet editor, a web browser, a presentation creation application or any other application where a print function is included that permits generation of a document from documentation application **208** onto a printer (not shown).

The at least one computer **204** is also configured to maintain a virtual printer driver **210** respective to one or more of tablet computers **50**. While FIG. **3** shows computer **204** maintaining a printer driver **210** respective to each tablet computer **50**, computer **204** need not maintain a printer driver **210** for all tablet computers **50**. Thus, document application **208** can also be used to send a print request to any tablet computer **50** that has its respective printer driver **210** installed on computer **204**.

Printer driver **210** is generally configured to conform with specification for the operating system that is native to computer **204**, thereby obviating the need to materially modify computer **204**. By the same token output files generated using printer driver **210** are generally configured to conform with the computing environment of its respective tablet computer **50**. Thus, printer driver **210** can be configured to include, the ability to define, on virtual-printing of a document from document application **208**, various printing options, such as which pages to print, number of pages per sheet, watermarking, portrait vs. landscape mode, paper size, resolution, colour vs. grayscale vs. black-and-white, scaling, margins and the like. In certain implementations, the printer driver **210** could be configured to utilize a standard script such as Postscript. The options provided can also consider the computing environment of the destination tablet computer **50**, such as screen size, screen resolution, available processing and memory resources, such that output file that is sent is optimized or otherwise consistent with that computing environment. Printer drivers **210** can also be configured to be processing-intensive such that output files generated at computer **204** are substantially completely rendered at computer **204** for display on the destination tablet computer **50**. Alternatively, printer drivers **210** can be configured to consume as little processing resources as possible at computer **204** so that the majority of processing and rendering occurs at the destination tablet computer **50**. Other aspects of printer drivers **210** will be discussed further below.

Enterprise configuration **202** also includes a private network **212** to which computer **204** can connect. Private network **212** also connects to an enterprise wireless base station **216** and an enterprise server **220**, both of which are also associated with enterprise configuration **202**. Private network **212** can also connect to various other computing devices (not shown), such as additional computers, or printers, or file servers, or print servers that are associated with the enterprise. Private network **212** also connects to a public network **224** through an enterprise firewall **228**.

Private network **212** can be based on any known local area network architectures, such as the Internet Protocol (IP) network running over Ethernet. Wireless base station **216** is typically a wireless local area network (WLAN) base station utilizing IEEE standard 802.11 or one of its variants. Tablet computers **50** can all connect to private network **212** via wireless base station **216** using their respective network interfaces **112**. In FIG. **3**, only tablet computer **50-1** and tablet computer **50-2** are shown connected to wireless base station **216**, but tablet computer **50-*n*** can also connect to wireless base station **216**. Typically, a given tablet computer **50** will associate with wireless base station **216** when in range of wireless base station **216**.

As will be discussed further below, enterprise server **220** is configured to manage a network printer address for tablet computer **50** that is used to route a print request from computer **204** (or another computer) based on relationship **142** between portable account identifier **138** and unique identifier **136**.

Public network **224** typically includes the Internet as well as interconnections with other types of public networks such as cellular telecommunication networks or Wi-Fi hotspots. Accordingly, one or more base stations **232** are connected to public network **224**. Base station **232** can thus be based on core mobile telecommunication network protocols (E.g. 3G, EDGE, as discussed above) or can be based on WLAN architectures such as public mobile hotspots. In an example embodiment, a plurality of base stations **232** can be typically provided, any one or more of which can be associated with a given tablet computer **50**. In FIG. **3**, only tablet computer **50-*n*** is shown connected to wireless base station **232**, but tablet computer **50-1** or tablet computer **50-2** can also connect to wireless base station **232**. Typically, a given tablet computer **50** will associate with wireless base station **232** when in range of wireless base station **232**, and utilize that association when that tablet computer **50** is not within range of wireless base station **216**.

In FIG. **4**, a flowchart depicting a method for document management using printer emulation is indicated generally at **300**. Method **300** is one example in which printer service **124** on the tablet computer **50** can be implemented. It is also emphasized that the method **300** can be varied and that the method **300** need not be performed in the exact sequence as shown. To assist in discussion of method **300**, a specific example to its performance will be discussed in relation to tablet computer **50** and system **100**.

Block **305** includes establishing a relationship in electronic memory between a portable account identifier and a unique identifier. In tablet computer **50**, block **305** includes establishing relationship **142** between unique device identifier **136** and portable account identifier **138**. Block **305** can be performed once when tablet computer **50** is originally provisioned with an account (not shown), such provisioning including associating the unique device identifier **136** of tablet computer **50** with the portable account identifier **138**. Relationship **142** can subsequently be terminated, and that portable account identifier **138** can be associated with other tablet computers **50**.

Block **310** includes receiving a print request over a network. In system **100**, the print request originates from computer **204**. The print request includes an output file. The print request is created from document manager **208** using the printer driver **210** maintained on computer **204** that is associated with its respective tablet computer **50**. The network printer address for the tablet computer **50** that is used to route the print request is managed by server **220** based on the relationship between the portable account identifier and the unique identifier. The methods by which server **220** manages the network printer address is not particularly limited, and various non-limiting examples of such management will be discussed below.

In tablet computer **50**, the print request is received at print service **124** of tablet computer **50**.

Block **315** includes displaying the output file that was part of the print request at block **310**. In tablet computer **50**, block **315** can be effected by print service **124** transferring the output file received at block **315** to the document manager application **128** within tablet computer **50**. When the document manager application **128** is executed on processor **100**, then the output file is generated on display **58** under the control of processor **100**. It will thus be apparent that block **315** need not occur immediately and that the output file can be stored on tablet computer **50** until such time as block **315** is invoked.

The methods by which server **220** manages the network printer address used to send print requests from computer **204** to a given tablet computer **50** is not particularly limited. FIG. **5** shows one example of how block **310** can be implemented. In FIG. **5**, system **200** is shown with a print request **240** being sent from document application **208** directly to tablet computer **50-1** via printer driver **210-1** along a pathway **224**. Pathway **224** thus contemplates that print request **240** is addressed directly to tablet computer **50-1**. Thus, in FIG. **5**, printer driver **210-1** is equipped with the direct network printer address of tablet computer **50-1** by server **220**.

In FIG. **6**, a flowchart depicting a method for virtual printer driver installation is indicated generally at **400**. Method **400** thus contemplates one example in which driver **210-1** that utilizes pathway **244** of FIG. **5** can be installed on computer **204**. In example embodiments, method **400** can be varied and that the method **400** need not be performed in the exact sequence as shown.

Block **405** thus includes receiving a driver installation request. The driver installation request can be effected using printer driver installation wizards that are native to the operating system used on computer **204**. For example, in a Windows™ environment, the "Add Printer Wizard" can be used can be used to browse for a network printer. This example implementation is useful because no third-party software or application needs to be installed on computer **204** in order to install the printer driver **210**, thereby providing an implementation for system **200** without modifying computer **204** except to provide computer **204** with a printer driver that conforms with the operating system specifications for computer **204**.

Server **220** is configured to host virtual representations of the print service **124** for each tablet computer **50** that are browsable by computer **204** over private network **212**. (However, browsing is only one such example in which native printer driver installation wizards may be utilized.) Such browsing may be either directly to server **220**, or via another server (not shown) that hosts a directory of printers available to computer **204**.

FIG. **7** shows an example graphic interface that can be generated on the display of computer **204** using the standard Windows XP™ "Add Printer Wizard", to browse a printer network directory, and ultimately generate a driver installation request consistent with block **405**. In the example of FIG. **7**, three virtual printers are offered according to the native Windows XP environment, with account labels **248** under the "Name" column. (Again, the example in FIG. **7** can be modified to work with other operating systems including other Windows operating systems, or Linux operating systems, or MACOS operating systems, or others). Specifically account label **248-1** reads "John's Tablet", account label **248-2** reads "Dave's Tablet" and account label **248-*n*** reads "Steve's Tablet". (Other printers or virtual printers connected to network **212** which are part of the directory can also be shown).

For discussion purposes, Table I provides an example initial relationship between the virtual printers as labeled in FIG. **7** and tablet computers **50**, the contents of Table I being maintained by server **200**.

TABLE I

First Example of Accounts, Identifiers and Relationships

ACCOUNT LAYER		DEVICE LAYER		
Account Label 248	Account Identifier 138	Tablet Computer 50	Unique Identifier 136	RELATIONSHIP LAYER Relationship 142
Label 248-1 ("John's Tablet")	138-1	50-1	136-1	142-1
Label 248-2 ("Dave's Tablet")	138-2	50-2	136-2	142-2
Label 248-n ("Steve's Tablet")	138-n	50-n	136-n	142-n

As emphasized above, Table I represents an initial relationship, but it is contemplated that such relationships can change and be dynamically accommodated such that the risk of a document being virtually printed to an incorrect tablet computer **50** is reduced or mitigated. Thus, the "Account Label **248**" column refers to the labels shown in FIG. **7**, and which in turn are associated in a fixed relationship with specific account identifiers **138** which are listed in the "Account identifier **138**" column, and thus the "Account Label **248**" column and the "Account identifier **138**" column appear under the heading "Account Layer".

The "Tablet Computer" column refers to three tablet computers **50** shown in system **200** in FIG. **3** and FIG. **5** and elsewhere, which are in turn associated in a fixed relationship with the specific unique identifiers **136** which are listed in the "Unique Identifier **136**" column, and thus the "Tablet Computer **50**" column and the "Unique Identifier **136**" column appear under the heading "Device Layer".

The "Relationship **142**" column refers to the specific relationship between various accounts and devices and it is this relationship that can change.

Returning now to the discussion of block **405** of method **400**, assume that an instruction is received at computer **204** selecting "John's Tablet", to thereby generate a printer driver installation request in that is finally received at server **220**. Accordingly, block **410** includes determining a relationship between the account label within the driver installation request and a particular tablet computer. Continuing with the example, based on an examination of Table I, relationship **142-1** applies in that "John's Tablet" is associated with tablet computer **50-1**.

Block **415** includes sending the driver installation file with a network printer address for the tablet computer **50** as determined based on the relationship at block **410**. Continuing with the example, driver **210-1** will be sent from server **220** to computer **204** and which will include a network address for virtually printing directly to device **50-1** utilizing pathway **244** of FIG. **5**. Once received at computer **204**, printer driver **210-1** can be installed locally on computer **204** according to the printer driver installation methods native to the operating system of computer **204**.

Having completed block **415**, method **300** can be performed according to the specific example performance of block **310** in FIG. **5** as discussed above. As discussed above, however, the contents of Table I may change such that relationships **142** may no longer apply. The result is that there is a possibility of a document being printed from document application **208** to an incorrect tablet computer **50**. This can be particularly of concern if the documents being generated are of a sensitive or confidential nature. For example, assume that tablet computer **50-1** is lost or stolen. Accordingly, Table II shows an example of how Table I is updated in server **220** to reflect that tablet computer **50-1** is no longer associated with enterprise configuration **202**.

TABLE II

Second Example of Accounts, Identifiers and Relationships (Updated from Table I)

ACCOUNT LAYER		DEVICE LAYER		
Account Label 248	Account Identifier 138	Tablet Computer 50	Unique Identifier 136	RELATIONSHIP LAYER Relationship 142
Label 248-1 ("John's Tablet")	138-1	NONE	NONE	NONE
Label 248-2 ("Dave's Tablet")	138-2	50-2	136-2	142-2

TABLE II-continued

Second Example of Accounts, Identifiers and Relationships (Updated from Table I)

ACCOUNT LAYER		DEVICE LAYER		
Account Label 248	Account Identifier 138	Tablet Computer 50	Unique Identifier 136	RELATIONSHIP LAYER Relationship 142
Label 248-n ("Steve's Tablet")	138-n	50-n	136-n	142-n

Thus, when method **400** is performed when Table II is maintained in server **200**, it will not be possible to install a printer driver associated with "John's Tablet" and account identifier **138-1**, thereby blocking the ability to send a printer output file from computer **204**.

In another scenario, however, Table I may be updated to Table II after printer driver **210-1** has already been installed on tablet computer **50-1**, leading to the possibility that computer **204** could still be used to send a confidential or sensitive document to tablet computer **50-1** resulting in unauthorized access to that document. In example embodiments, various controls can be used to mitigate or reduce the likelihood of such unauthorized access occurring.

One technique contemplates that printer service **124** is configured to verify that its local relationship **142** is valid before accepting or processing print request **240**. Thus a copy of relationship **142** can be included in print request **240** and then upon receipt of print request, printer service **124** will verify that the relationship **142** received in the print request **240** matches the relationship **142** stored locally on the tablet computer **50-1**. Thus, according to this technique, tablet computer **50-1** can be remotely wiped using existing techniques such that account identifier **138** and relationship **142** are deleted from tablet computer **50-1** during the remote wipe, so that printer service **124** will fail to validate the relationship and printer service **142** refuses to accept the print request. Another variation contemplates that the printer network address is itself managed by printer service **124**, and thus the remote wipe will automatically render the tablet computer **50-1** unaddressable in the print request **240**. A still further technique contemplates the use of an encryption methodology based on relationship **142**, such that the printer driver **210** will utilize relationship **142** as part of encryption key to generate print request **240**. Relationship **142** can be used as the encryption key itself, thus, the wiping of relationship **142** from tablet computer **50-1** will result in the wiping of the encryption key. Additional security can be provided by having relationship **142** be an index to an decryption key that is generated elsewhere (e.g. server **220**) and then stored on tablet computer **50-1**, (with the corresponding encryption key being incorporated directly into printer driver **210-1**), again such that the decryption key is wiped upon a remote wipe of tablet computer **50-1**.

In FIG. **8**, another system for document management is indicated generally at **200***a*. System **200***a* is a variation on system **200** and thus like references bear like elements except followed by the suffix "a". System **200***a* can use another approach to implementing block **310**, whereby print requests **240***a* are always carried through server **220***a*. In this manner, further security can be afforded without concern about the state of the printer driver **210***a* as installed on computer **204***a*, since the validity of all print requests are centrally administered by server **220***a*. Indeed, when Table I changes to Table II, server **220***a* can be configured to simply refuse print requests from computer **204***a* and return an error to computer **204***a*. Furthermore, when there is a change of one account to another tablet computer **50***a*, then an installed printer driver **210***a* need not necessarily be updated, but rather server **220***a* will automatically route the print request **240***a* associated with one account to the new tablet computer **50***a*.

In a further variation, server **220***a* can be configured to locally host a print service **124** for each tablet computer **50***a*, and then to send the document to the document manager **128** on the destination tablet computer **50***a*, thereby obviating the need for a print service **124** on each tablet computer **50***a* and facilitating the use of example embodiments disclosed herein on legacy tablet computers **50***a* or other legacy computer devices. In this example, the output file can be converted to an email attachment that is sent to the correct tablet computer **50***a* as an email attachment (e.g. as a PDF, TIFF, JPG or other standard image file) to document manager **128** or other application within the destination tablet computer **50***a*.

Usefully, the functionality of server **220***a* can be incorporated directly into existing enterprise servers, such as an Microsoft Exchange Server, or a BlackBerry Enterprise Server, leveraging off of existing infrastructure in the existing enterprise server. Furthermore different layers of encryption can be provided between computer **204***a* and server **220***a*, or between server **220***a* and tablet computers **50***a*.

FIG. **9** shows an example of a document manager application on a display of the tablet computer of FIG. **1** that can be used to browse documents received on the tablet computer using the method of FIG. **3** or its variants.

FIG. **10** shows another example system for document management indicated generally at **200***b*. System **200***b* is a generalized version of system **200**. System **200***b* contemplates, amongst other things, that server **220***b* can optionally be used to cache or spool output files received from computer **204***b* destined for tablet **50***b* when tablet **50***b* is offline.

Certain other general features can be used in variations. For example, in a less secure context tablet **50** can be configured to advertise itself as an available printer on a network bypassing server **220** altogether. As another example, tablet **50** can be configured with near field communication apparatuses which can be detected by computer **204** and used to obtain and establish a printer driver **210**.

As another example, tablet **50** can be configured to send an email or other electronic communication to computer **204**. Such an electronic communication can be configured to include a dedicated printer driver **210**, or a link to such a dedicated printer driver **210**. Upon receipt of the electronic communication computer **204** can be configured to utilize the electronic communication to install the dedicated printer driver **210**.

For added security, temporary public encryption keys can be used to install the printer drivers **210**. Alternatively, such encryption keys can be configured to permit a "single print" from the computer **204** and thereafter be unusable for sending printed files directly to tablet **50**. (E.g. the printer driver **204** expires after one print). In the case of the temporary key, printer driver **204** can be configured to remove itself from the list of printer devices after expiry.

Alternatively, once paired, the target appears as a printer on the source device until it is removed.

Alternatively, tablet computer **50** can be configured to require or automatically accept submitted files to include source signature authentication.

Tablet computer **50** can also be configured to send a notification warning that print request **240** is being sent. Alternatively, or in addition, tablet computer **50** can be configured to automatically accept or deny the print request **240** based on

characteristics such as file size, format etc. Such a notification can be sent by email, text message or the like. Likewise a notification can also be sent to computer **204**.

In another variation, server **220** can be configured to receive a print request **240** from computer **204**, and then configured to in turn send that print request **240** to a plurality of different tablet computers **50**, caching the print request **240** until a particular tablet computer **50** comes back on line. Most general case of this could be a print to email service

Computer **204** can also be configured to, via the printer driver **210** or other methods, to print the file with a hash of the file encoded with its private key so that tablet computer **50** can confirm that it does come from a known source via the public key for that computer **204**. Computer **204** can also be configured to receive a fax on behalf of a given tablet computer **50** and then to send that fax as a print requests **240** to the tablet computer **50**.

In a further example variation, the Wi-Fi Direct™ or similar technology enabling Wi-Fi devices to connect directly, for operations such as printing, sharing, synching and displaying.

In yet a further example variation, Bluetooth™ or similar technology enabling Bluetooth™ enabled devices to connect directly can be used for operations such as printing, sharing, synching and displaying.

In yet further example variations, any other suitable technology for connecting devices can be used for operations such as printing, sharing, synching and displaying including, but not limited to, wired and wireless connections. Wired USB (Universal Serial Bus) connections are within the scope of example implementations.

FIG. **11** shows another example system **1000** for document management indicated generally at **200***c*. System **200***c* is a generalized version of system **200**, and thus like references bear like elements except followed by the suffix "c". Print Driver **210***c* of computer **2014***c* is in communication with server **220***c* via a link **1101**, while server **220***c* is in communication with a notification application **1103** at tablet computer **50***c* via a link **1105**. Printer driver **210***c* is also in communication with a file transfer application **1107** at table computer **50***c* via a link **1109**. Each of notification application **1103** and file transfer application **1107** are in communication with print service **124***c*, which in turn is in communication with a print application user interface **1130** via a link **1111** internal to tablet computer **50***c*.

In example embodiments, each of links **1101**, **1105**, **1109** include any suitable components of system **200** (i.e. network **212**, base station **216** and the like) and can include a combination of wireless and wired components as desired.

In example embodiments, each of links **1101**, **1105**, **1109** can be implemented according to any suitable protocol. In specific non-limiting example implementations, link **1101** can be implemented according to REST (REpresentational State Transfer) protocol, while link **1105** can be implemented according to TLS (Transport Layer Security Protocol) protocol, and link **1109** can be implemented according to any suitable peer-to-peer protocol. In an example embodiment, each of links **1101**, **1105**, **1109** can be implemented according to SIP (Session Initiation protocol) protocol. Link **1111** can be implemented according to any suitable protocol.

Notification application **1103** (also referred to herein as notification **1103**) includes an application for implementing the printing process of method **300**. For example, notification **1103** can be enabled to provide notification to, for example print service **124***c*, that server **220***c* and/or computer **204***c* is waiting for tablet device **50***c* to perform an action and hence cause tablet computer **50***c* to perform an action such as pull print request **240***c* from computer **204***c*, as will presently be explained.

Similarly, file transfer application **1107**(also be referred to herein as file transfer **1107**) includes an application for receiving print request **240***c*, such as a web server application and providing print request **240***c* to print service **124***c*.

In some implementations, print service **124***c* includes one or more of notification **1103** and file transfer **1107**, while in other implementations each of print service **124***c*, notification **1103** and file transfer **1107** can include separate modules at tablet computer **50***c* each enabled to interact with one another. In any event, print service **124***c*, notification **1103** and file transfer **1107** include platform and collaboration services at tablet computer **50***c*, in an example embodiment.

Print application user interface (PAUI) **1130** includes a user interface application **1130** for providing printing options at tablet computer **50***c*. In example implementations, PAUI **1130** enables a user interface to be provided at a display of tablet computer **1130** for presenting options to accept or decline a print request as will be explained hereafter.

In some example implementations, print service **124***c*, notification **1103** and file transfer **1107** can use an underlying SIP infrastructure associated with other applications (e.g. applications **132**) at tablet computer **50***c*. For example, one of other applications at tablet computer **50***c* can include a communications application, such as a voice applications, a texting applications, a video chat application, or the like, which uses SIP to communicate with other devices to establish communication sessions there between, including but not limited to multimedia communication sessions. In an example embodiment, print service **124***c*, notification **1103** and file transfer **1107** can use the same underlying communication infrastructure for notification and data (i.e. file) transfer as the communications application.

For example, as will be presently be explained, part of the notification process is providing to both computer **220***c* and tablet computer **50***c* private data associated with one or the other of each, including but not limited to network addresses such as IP (internet protocol) addresses. Hence, SIP can be used to confirm aspects of the communications as in SIP devices dialogue (e.g. like a phone call); the dialogue can include a user interaction, for example with tablet computer **50***c* via PAUI **1130**, to confirm the communications.

FIG. **12** which depicts a diagram of communications between print driver **210***c* at computer **204***c*, server **220***c* and print service **124***c*, notification **1103** and file transfer **1107** at tablet computer **50***c* in implementation where a "pull" process is implemented, in which tablet computer **50***c* pulls print request **240***c* from computer **204***c*. In example embodiments, communications between computer **204***c*, server **220***c* and tablet computer **50***c* can occur according to any suitable protocol and/or combination of protocols, including but not limited to SIP protocols.

At **1201**, print service **124***c* subscribes to events at notification **1103**. At **1203**, print driver **210***c* at computer **210***c* determines that a file is ready to be "printed" (i.e. printed to tablet computer **50***c*), for example print request **240***c*. In specific non-limiting implementations, at **1205**, computer **104***c* causes a "mini" HTTP (Hypertext Transfer (or Transport) Protocol) server to be processed to assist in file transfer. At **1207**, computer **204***c* generates a suitable security key, for example the encryption key described above.

At **1209**, computer **204***c* posts a URL (uniform resource locator) of the mini HTTP server to server **220***c* (e.g. via link **1101**), as well as any suitable identifier of tablet computer **50***c* ("BBID"), such as an identifier **136** described above, and

information identifying the file to be printed. The post at **1209** can include the security key generated at **1207**. At **1211**, server **220***c* locates tablet computer **50***c* via the identifier of tablet computer **50***c*, and at **1213** transmits an invite message to notification **1103** at tablet computer **50***c*, for example via link **1105**, which can also include the security key. In these example implementations server **220***c* is configured to manage a network printer address for tablet computer **50***c* that is used to route print data from computer **204** (or another computer) as described above.

Notification **1103** transmits a "200OK" message back to server **220***c* at **1215**, which in turn transmits a "201OK" message back to computer **204***c*, each of which indicate that the invite message at **1213** was received at tablet computer **50***c*.

At **1219**, notification **1103** notifies print service **124***c* of receipt of the invite message, as well as an address (i.e. the URL) of the HTTP mini server at which print request **240***c* can be retrieved. The notify event at **1219** is in response to the subscribe event at **1201**.

In any event, at **1221**, print service **124***c* issues a get file command to file transfer **1107** which includes the address (e.g. the URL) of the HTTP mini server at computer **204***c*. At **1223**, print service **124***c* further issues a notify message to notification **1103** indicating that a session for receiving print request **240***c* has started.

At **1225**, file transfer **1107** transmits a get message (e.g. an HTTPS GET command) to print driver **210***c* at computer **204***c*, for example via link **1109**, using the address of the HTTP mini server. The get message at **1225** can include the security key received at **1213** such that computer **204***c* can verify that the get message is being received from the resource to which printing was intended. At **1227**, computer **204***c* transmits a "200OK" message back to file transfer **1107** which includes print request **240***c*. Hence, when **1227** occurs, print request **240***c* is received at tablet computer **50***c* such that the associated document can be viewed, as described above.

At **1229**, file transfer **1107** informs print service **124***c* that print request **240***c* has been received, and at **1231** print service **124***c* informs notification **1103** that the session has ended. At **1233**, computer **204***c* tears down the resources used for the print to tablet computer **50***c* process, for example the mini HTTP server.

In these example implementations, server **220***c* is enabled to negotiate the notification process and that tablet computer pulls print request **240***c* from computer **204***c*.

FIG. **15** is substantially similar to FIG. **11**, with like elements having like numbers with, however, a "d" appended thereto rather than a "c". Notification application **1103***d* has, however, been replaced with discovery application **1103***d*, which will interchangeably referred to as discovery **1103***d*. Discovery **1103***d* can be enabled to assist in the process of determining a network address of tablet computer **50***d* such that a web server application (e.g. file transfer application **1107***d*) can be launched and print file **240***d* transmitted to tablet computer **50***d*. For example, notification application **1103***d* can be enabled to provide notification to, for example print service **124***d*, that server **220***d* and/or computer **204***d* is waiting for tablet device **50***d* to perform an action and hence cause tablet computer **50***d* to perform an action such as pull print request **240***d* from computer **204***d*, as will presently be explained.

FIG. **13** depicts a communication diagram of communications between print driver **210***d* at computer **204***d*, server **220***d* and print service **124***d*, discovery **1103** and file transfer **1107***d* at tablet computer **50***d* in implementation where a "push" process is implemented, in which computer **204***d* pushes print request **240***d* to tablet computer **50***d*. In example embodiments, communications between computer **204***d*, server **220***d* and tablet computer **50***d* can occur according to any suitable protocol and/or combination of protocols, including but not limited to SIP protocols.

1301 and **1309** are similar to **1201** and **1209** respectively of FIG. **12**, however the post at **1309** posts: the identifier of tablet computer **50***d*, an identifier of a type of event that is to occur between computer **204***d* and tablet computer **50***d* (e.g. a file transfer event denoted by "event=file-xfer-req"), and an identifier of a service associated with the event (e.g. print service **1124***c* as denoted by "app=ptg"). However, any suitable information can be posted which indicates that a document is to be printed to tablet computer **50***c* and that the information posted is not to be considered particularly limiting.

At **1311**, server **220***d* locates tablet computer **50***d* based on the identifier of the tablet computer **50***d* ("BBID") as described above, and at **1313** transmits an invite message to discovery **1103***d* similar to the invite message of **1213**, however the invite message of **1313** includes the identifier of a type of event that is to occur between computer **204***d* and tablet computer **50***d* (e.g. a file transfer event denoted by "event=file-xfer-req"), and the identifier of a service associated with the event (e.g. print service **1124***c* as denoted by "app=ptg"). At **1319**, discovery **1103***d* notifies print service **124***d* that a print event has been requested, and at **1320***a* print service **124***d* causes PAUI **1130***d* to provide a prompt at a display of tablet computer **50***d* as to whether or not to accept the incoming print request. For example, print service **124***d* and PAUI **1130***d* can communicate via link **1111***d*, such that PAUI **1130***d* provides a prompt at the display of tablet computer **50***d* such as "Incoming print request" with an option to "Accept" or "Decline" the request. The format and/or wording of the prompt is not to be considered particularly limiting.

In any event, while tablet computer **50***d* is waiting for a response to the prompt, at **1320***b*, print service **124***d* notifies discovery **1103***d* that a prompt is being provided and that tablet computer **50***d* is waiting for a response to the prompt. In turn, at **1320***c*, discovery **1103***d* notifies server **220***d* ("18×" in SIP notation) that tablet **50***d* is providing an alert to a print request. At **1320***d*, server **220***d* creates a session and at **1320***e* provides a session identifier to computer **204***d*, which responds at **1320***f* with a hanging "GET" request. In other words, at least a portion of computer **204***d* enters a waiting mode until a response to the prompt is received.

In present implementations, it is assumed that a positive response to the prompt is received at **1320***g*: for example, PAUI **1130***d* received the positive response and communicates such to print service **124***d*. In other implementations, a negative response to the prompt can be received, which point messages are exchanged between tablet device **50***d*, server **220***d* and computer **240***d* indicating that the print request has been rejected. However, in present implementations, when a positive response to the prompt is received at **1320***g*, at **1320***h*, print service communicates with file transfer **1107***d* to create a file transfer session. File transfer **1107***d* starts a mini HTTP server at tablet device **50***d*, similar to the mini HTTP server started by computer **204***d* at **1205**. File transfer **1107***d* responds, at **1320***i*, by generating an address for receiving print request **240***d*, which in these implementations can include but is not limited to an IP address, a file transfer URL, and the like. The address for receiving print request **240***d* is then provided to print service **124***d* at **1321**, and at **1323** print service notifies discovery **1103***d* that the prompt has received a positive response along with the address for receiving the print request **240***d*.

At **1315**, discovery **1103***d* notifies ("200OK") server **220***d* of the address for receiving print request **240***d*, and acknowledges the notification at **1315***a*. In turn, at **1317**, server **220***d* notifies computer **204***d* of the address for receiving print request **240***d*. Computer **204***d* interprets message received at **1317** as a response to the hanging "GET" at **1320***f*, and responds at **1325** by posting print request **240***d* to the address received at **1317**: in other words computer **204***d* transmits print request **240***d* to the file URL generated by file transfer **1107***d* at **1320***i*, for example via link **1109***d*. File transfer **1107***d* responds to receiving print request **240***d* by: at **1327** notifying computer **104***c* that print request **240***d* has been received; and at **1329** notifying print service **124***d* that print request **240***d* has been received. At **1331** print service **124***d* notifies discovery **1103***d* that the session is to be terminated, and at **1333** discovery **1103***d* notifies server **220***d* that the session is to be terminated (e.g. using both a "200OK" message and a "BYE" Message).

In these implementations, server **220***d* is enabled to negotiate the notification process and that computer **204***d* pushes print request **240***d* to tablet computer **50***d* once tablet computer print request **240***d* has been approved at tablet computer **50***d*. In these example implementations, a web service is first offered (in a notification request) from a first computing device (e.g. computer **204***d*) to a second computing device (e.g. tablet computer **50***d*), and the second computing device returns a network address (e.g. an IP address and/or a URL) to the first computing device once the web service is approved (e.g. by receiving a positive response to a prompt provided at a display device of the second computing device); a file associated with the web service is then pushed to the provided network address. Hence, a user associated with the second computer has an option to accept or decline a notification request.

However, in other example implementations, **1320***a*-**1320***g* can be omitted and print request **240***d* is pushed to tablet computer **50***d* without providing a prompt.

In further example implementations, print driver **210***d* at computer **104***c* invoke a RESTful interface on server **220***d* (e.g. over HTTPS), to "discover and communicate" with its peer app component (e.g. discovery **1103***d*) at target table computer **50***d*. This is essentially a "print request" from the computer **204***d* to tablet computer **50***d*.

Server **220***d* authenticates the request, to verify the identity of the requestor. Server **220***d* does this by verifying a "token" that server **220***d* had issued to computer **204***d* previously.

Server **220***d* then locates tablet computer **50***d* based on a device identifier and notify tablet computer **50***d* about the event. If tablet computer **50***d* is not found, or not "in coverage" at, server **220***d* would return an error response back to print driver **201***c* and an error message will be presented at work station **204***d*.

At tablet computer **50***d*, discovery **1103***d* receives the event (e.g. over SIP infrastructure) and notifies print service **124***d*, which has previously subscribed to this event type. A prompt to accept the request can be included or omitted. In any event, once the request is accepted print service **124***d* requests file transfer **1107***d* to setup and provide a file address (e.g. the URL referred to above) for file transfer. File transfer **1107***d* then sends back the file address to server **220***d* which in turn responds back to computer **204***d*. Print driver **210***d* then transfers the file (i.e. print request **240***d*) directly tablet computer **50***d* using the file address.

In some implementations, signaling and call flow can change to support session-based poke-and-pull notifications (e.g. using a SIP INVITE method) when prompting is supported and/or to support printing to multiple devices simultaneously, canceling a print requests, etc. In an example embodiment, STUN (Session Traversal Utilities for NAT (network address translation)) [RFC (Request for Comments) 5389] protocol can be used by tablet computer **50***d* to obtain its external IP address, and if a direct connection is not possible due to firewall and NAT traversal issues, a globally accessible media midpoint can be used, similar to TURN (Traversal Using Relays around NAT) [RFC 5766] and ICE (Interactive Connectivity Establishment) [RFC 5245].

Attention is next directed to FIG. **14** which depicts a diagram of communications between print driver **210***d* at computer **204***d*, server **220***d* and print service **124***d*, discovery **1103***d* and file transfer **1107***d* at tablet computer **50***d* in implementation where a "push" process is implemented, in which computer **204***d* pushes print request **240***d* to tablet computer **50***d*. In example embodiments, communications between computer **204***d*, server **220***d* and tablet computer **50***d* can occur according to any suitable protocol and/or combination of protocols, including but not limited to SIP protocols. Communication diagram of FIG. **14** is similar to the communication diagram of FIG. **13**, however in the communication diagram of FIG. **14**, once notification occurs, computer **204***d* posts a hanging "GET" to tablet computer **50***d* rather than server **220***d*, as will presently be explained.

At **1401**, discovery **1103***d* registers with server **220***d* which confirms with a confirmation message (e.g. "200OK"). While a similar step is not depicted in FIGS. **12** and **13**, a similar step can occur in the communication diagrams of FIGS. **12** and **13**.

At **1409**, computer posts to server **220***d*: the identifier of tablet computer **50***d* and information regarding the document to be printed, for example a file identifier and/or file name. However, any suitable information can be posted which indicates that a document is to be printed to tablet computer **50***d* and that the information posted is not to be considered particularly limiting.

At **1413**, server **220***d* transmits an invite message to discovery **1103***d* similar to the invite message of **1214**. At **1419**, discovery **1103***d* notifies print service **124***d* that a print event has been requested. At **1419***a*, print service communicates with file transfer **1107***d* to create a session, which returns a session address ("sessionURL") to print service **124***d*. In some example implementations, a file location identifier is also passed from computer **204***d* to server **220***d* to tablet computer **50***d*, which can be provided to file transfer **1107***d*.

At **1419***b*, print service **124***d* acknowledges receipt of the notify message received at **1419**, and further provides the session address to discovery **1103***d* which transmits the session address to server **1102** at **1419***c*, which in turn transmits the session address to computer **104***c* at **1419***d*, as well as acknowledging receipt of session address at **1419***e*.

In addition to implementing **1419***b*, at **1420***a*, print service **124***d* causes a prompt to be provided similar to **1320***a* described above. In other words, while the session addressed is being passed to computer **204***d*, tablet **50***d* provides a prompt as to whether or not accept the print request.

In any event, at **1420***b*, computer **204***d* transmits a "GET" request to the session addressed provided at **1419***d*. The get request at **1420***b* is a hanging "GET" request, similar to that of **1320***f*, however transmitted to tablet computer **50***d* rather than server **220***d*. Hence, once server **220***d* acknowledges receipt of the session address received at **1419***c*, server **220***d* is no longer involved in the file transfer.

At **1420***c*, a positive response to the prompt is received, similar to **1420***g* described above, and at **1423** print service transmits an "allow file" message to file transfer **1107***d*, similar to **1323**. However, the allow file message at **1423** includes the session identifier and the file identifier previously

received. At **1423***a*, file transfer **1107***d* transmits a response to the hanging get received at **1420***b*, which includes an address for posting print request **240***d*. Computer **204***d* responds by posting ("PUT") print request **240***d* to the address for posting print request **240***d*. File transfer **1107***d* receives print request **249***c* and causes the resulting file to be stored at **1426** for later access by an application for rendering the file. File transfer **1107***d* further acknowledges receipt of print request **240***d* at **1427**, and further notifies print service **124***d* that print request **240***d* has been received. At **1431** print service **124***d* notifies discovery **1103***d* that the session is to be terminated, and at **1433** discovery **1103***d* notifies server **220***d* that the session is to be terminated (e.g. using both a "200OK" message and a "BYE" Message).

In these example implementations, server **220***d* is enabled to negotiate the notification process and that computer **204***d* pushes print request **240***d* to tablet computer **50***d* once tablet computer print request **240***d* has been approved at tablet computer **50***d*. In these example implementations, a web service is first offered (in a notification request) from a first computing device (e.g. computer **204***d*) to a second computing device (e.g. tablet computer **50***d*), and the second computing device returns a network address (e.g. an IP address and/or a URL) to the first computing device once the web service is approved (e.g. by receiving a positive response to a prompt provided at a display device of the second computing device); a file associated with the web service is then pushed to the provided network address. Hence, a user associated with the second computer has an option to accept or decline a notification request.

Communication diagrams, of FIGS. **12-13** have been described with reference to systems **1000***d*. System **1000***d* can be enabled to implement one or more of the communication diagrams of FIGS. **12-13**, though generally not simultaneously, and can be further enabled to pull print request **240***c* to tablet computer **50***c*. Further, tablet computer **50***d* can be further enabled to obtain approval to accept, and alternatively decline, print request **240***d*.

In some example implementations, systems **1000**/**1000***d* can be enabled to only allow printing to one device only at a time, even there are multiple devices associated with a user. Further, print drivers **210***c*/**210***d* can be enabled to support printing to a plurality of tablet computers (e.g. each similar to tablet computer **50***c*/**50***d*).

However, in other implementations, systems **1000**/**1000***d* can be enabled for a plurality of print "sessions", with several file transfers taking place simultaneously. Such transfers can be implemented using a plurality of session identifiers, a plurality of file addresses and the like.

In yet further implementations, print drivers **210***c*/**210***d* could be enabled to receive a PIN (print identification number) in the "printer" that they install, such that specific printers can be targeted in a print request. If PIN is blank, server **220***c*/**220***d* will select the first online/in-coverage device to send the request to. If PIN is a given indicator, such as "*", server **220***c*/**220***d* will target all (online/in-coverage) devices of associated with a given identifier of a user.

For each of the communication diagrams of FIG. **11-13**, computer **204***c*/**204***d* is enabled to sign-in (using any suitable credentials, such as an identifier of tablet device **50***c*/**50***d*) and obtain authentication credentials, such as an authentication token, in an example embodiment.

Communication between computer **204***c*/**204***d* and server **220***c* can be secure (for signing in, as well as print request signaling), for example using HTTPS (HTTP over SSL (Secure Socket Layer) or HTTP Secure), in example embodiments. For this, server **220***c*/**220***d* is enabled to access a TLS server and will present its own certificate to computer **204***c*/**204***d*. Such a certificate can be similar to certificates used to provide secure media communications, such as with Video Chat applications.

Communication between server **220***c*/**220***d* and tablet computer **50***c*/**50***d* can also be secure.

Secure communications can also occur for the file transfer directly between computer **204***c*/**204***d* and tablet computer **50***c*/**50***d* which can also be over HTTPS.

Tablet computer **50***d* can also authenticate computer **204***d* in the HTTPS POST request for file transfer, e.g. at **1325** and/or **1425**. When tablet computer **50***d* gets a print request, it would setup and generate a URL to send back to computer **204***d* for pushing the file. This URL goes all the way back to computer **204***d*, through secure TLS (from tablet computer **450***d* to server **220***d*), and HTTPS (from server **220***d* to computer **204***d*). In the URL that tablet computer **50***d* generates, tablet computer **50***d* can embeds a temporary "token" for a session. Tablet computer **50***d* can verify this token in the HTTP request received later from computer **240***d* during file transfer to ensure authenticity.

In further implementations, server security token issued and stored at computer **204***c*/**204***d* for printing to tablet computer **50***c*/**50***d* can be revoked. Hence, if computer **204***c*/**204***d* (e.g. a laptop) is lost or transferred, rights to print to tablet computer **50***c*/**50***d* can be revoked.

For example, a "Token Revocation" command could be generated at tablet computer **50***c*, which would timestamp of the event. Hence, any token associated with a time before the revocation would be considered "invalid" or "expired".

Servers **220***c*/**220***d* could verify authenticity, expiry, etc. of tokens. For example, in requests to tablet computer **50***c*/**50***d*, server **220***c*/**220***d* could also pass along the time that the token was issued. Print service **124***c*/**124***d* could check this timestamp against the timestamp of revocation. If the issued time was before the revoked time, tablet computer **50***c*/**50***d* would send the result back to server **220***c*/**220***d* which inform print driver **210***c*/**120***d*, which would then delete the stored (but invalid) token permanently and optionally provide a prompt for obtaining a new token.

In yet further example variations, systems and method described herein can be implemented in a consumer environment rather than an enterprise environment, For example, a household computer can be used to "print" to tablet computers associated with each member of the household computer via a household network and/or a consumer network and/or a household server and/or a consumer server operated, for example, by a service provider.

While specific example embodiments of the invention have been described and illustrated, such example embodiments should be considered illustrative of the invention only and not as limiting the invention as construed in accordance with the accompanying claims.

The invention claimed is:

1. A method comprising:

in response to receiving, at a computing device, an instruction to print a document at a portable electronic device, generating, at the computing device, a printer driver installation request, the printer driver installation request including a portable account identifier associated with a portable account and a unique identifier associated with the portable electronic device;

sending the printer driver installation request from the computing device to a server;

receiving, at the computing device, a printer driver installation file sent by the server, the printer driver installation file comprising a network address associated with

the portable electronic device, the network address being determined, at the server, based on an association of the portable account identifier associated with the portable account with the unique identifier associated with the portable electronic device;

executing, at the computing device, the printer driver installation file to install a printer driver at the computing device for printing the document on the portable electronic device; and

sending a print request from the computing device to the network address associated with the portable electronic device.

2. The method of claim **1**, further comprising, generating, at the computing device, an output file from the document using the printer driver.

3. The method of claim **2**, wherein sending the a print request comprises transmitting the output file directly to the portable electronic device from the computing device.

4. The method of claim **2**, wherein sending the print request comprises transmitting the output file to the portable electronic device from the computing device through the server.

5. The method of claim **2**, wherein sending the print request comprises transmitting the output file from the computing device to the portable electronic device via email.

6. The method of claim **2**, further comprising encrypting the output file at the computing device.

7. The method of claim **2**, wherein sending the print request comprises putting the output file in a print queue.

8. The method of claim **2**, wherein the output file is a portable document format (PDF) document.

9. The method of claim **2**, wherein sending a print request comprises pushing the output file from the computing device to the portable electronic device.

10. The method of claim **1**, wherein sending the print request comprises, when the portable electronic device is unavailable, delaying sending the print request until the portable electronic device.

11. The method of claim **1**, further comprising executing, at the computing device, a document manager application to generate the print request.

12. The method of claim **11**, wherein the print request is sent by the document manager application.

13. The method of claim **1**, further comprising receiving an availability status of the portable electronic device at the computing device.

14. The method of claim **1**, wherein the printer driver conforms with operating system specifications for the computing device.

15. The method of claim **1**, wherein the print request includes the association of the portable account identifier associated with the portable account with the unique identifier of the portable electronic device.

16. The method of claim **1**, further comprising:

generating, at the computing device, the instruction to print the document at the portable electronic device in response to detecting selection of the portable electronic device from a print menu displayed on a display of the computing device.

17. A non-transitory computer readable medium storing a computer program comprising computer-executable instructions, wherein the instructions when executed cause a computing device to perform operations comprising:

in response to receiving, at the computing device, an instruction to print a document at a portable electronic device, generating, at the computing device, a printer driver installation request, the printer driver installation request including a portable account identifier associated with a portable account and a unique identifier associated with the portable electronic device;

sending the printer driver installation request from the computing device to a server;

receiving, at the computing device, a printer driver installation file sent by the server, the printer driver installation file comprising a network address associated with the portable electronic device, the network address being determined, at the server, based on an association of the portable account identifier associated with the portable account with the unique identifier associated with the portable electronic device;

executing, at the computing device, the printer drive installation file to install a printer driver at the computing device for printing the document on the portable electronic device; and

sending a print request from the computing device to the network address associated with the portable electronic device.

18. A computing device comprising:

a display, and

a processor controlling the display and operating to:

in response to receiving an instruction to print at a portable electronic device, generate a printer driver installation request, the printer driver installation request including a portable account identifier associated with a portable account and a unique identifier associated with the portable electronic device;

send the printer driver installation request from the computing device to a server;

receive a printer driver installation file sent by the server, the printer driver installation file comprising a network address associated with the portable electronic device, the network address being determined, at the server, based on an association of the portable account identifier associated with the portable account with the unique identifier associated with the portable electronic device;

execute the printer drive installation file to install a printer driver at the computing device for printing the document on the portable electronic device; and

send a print request to the network address associated with the portable electronic device.

19. The computing device of claim **18**, wherein the processor is further operating to generate an output file from the document using the printer driver.

20. The computing device of claim **18**, wherein the print request includes the association of the portable account identifier associated with the portable account with the unique identifier of the portable electronic device.

* * * * *